SIGNAL

SDS Series

(SDS-50 / SDS-100)

Two-wire and Direct Relay Irrigation Controllers

Operator Manual

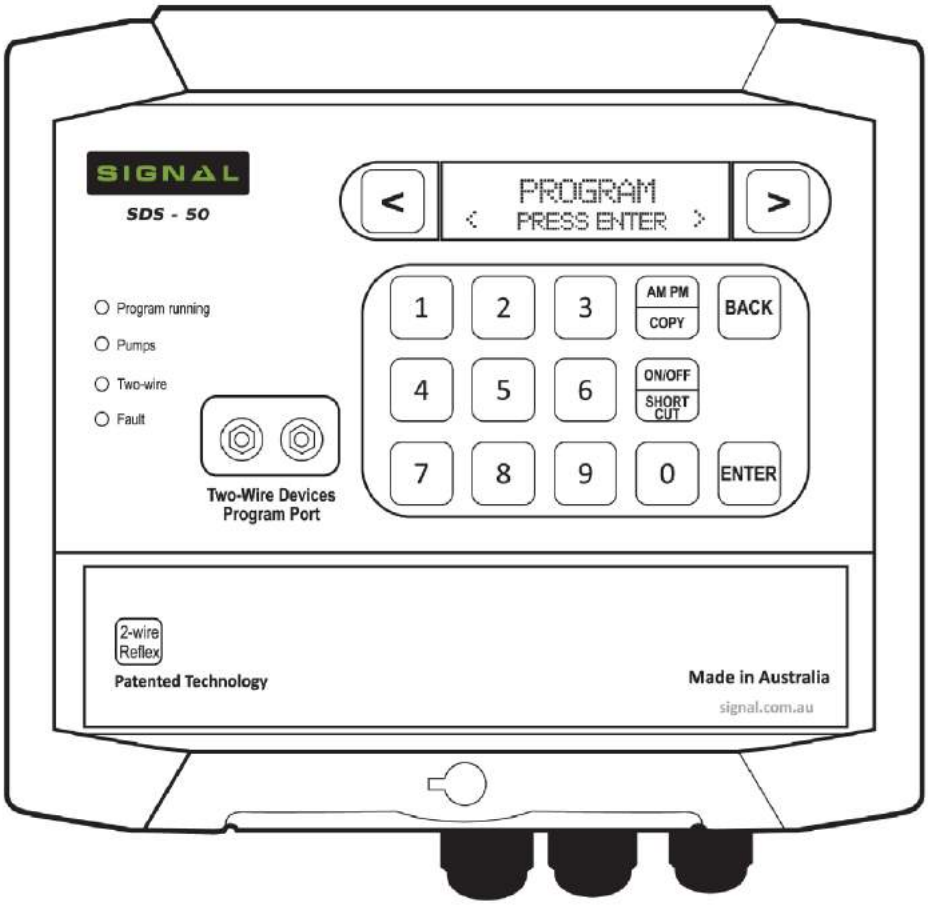

Thank you for purchasing a SIGNAL SDS Series irrigation controller.

The SIGNAL SDS Series is an Australian designed and manufactured irrigation control system, designed for ease-of-use programming, while allowing for the complex requirements of both landscape and agricultural applications.

The modular design of SDS Series controllers makes servicing possible for the owner/operator - with easily accessible replacement plug-in electronic modules.

The SDS-50 controller has a capacity to operate 48 solenoid valves from a central location via two-wire or multi-wire installation, while the SDS-100 increases this number to 96. In the event of two-wire, 12 programmable DataNodes™ facilitate the connection of sensors along the cable. An additional 6 controller direct inputs on the controller terminal. Up to two 24 direct relay output modules can be connected at any location on the two-wire cable for conventional 24VAC solenoid operation.

With SDS Series controllers, there’s no need for separate valve decoders. Simply connect the cable direct to the SIGNAL DataCoil™.

Communication options include 4G modem, WiFi and ethernet. These enable remote programming and monitoring via SignalCloud Central Control Software (Web-based) or the SignalCloud Mobile App for iPhone/iPad and Android.

Made in Australia

The SDS Series of controllers are designed to operate on low voltage 36VDC. Use only the power supply included with the controller.

The power supply must be installed to comply with local electrical codes.

Prior to digging or trenching check with your local utilities for any underground services.

Wear protective and insulated footwear when working with electrical equipment.

SDS Series Controllers are packaged complete with the following items:

1 x SDS Series two-wire irrigation controller

1 x 36VDC switching power supply

1 x Pump-start PumpNode (SDS-50: no. 49, SDS-100: no. 97)

1 x Surge Protector

1 x Set of plug-in alligator leads for two-wire device programming

1 x Instruction Book

1 x Only mounting template

Warranty Conditions – Signal Data Systems control equipment

Technical Irrigation Imports warrants to the first consumer purchaser from an authorised Dealer within Australia that this product will be free from defects in materials and/or workmanship from the date of purchase for a period of 12 months.

To exercise their rights under this Warranty as a purchaser, they must ship this product in secure and appropriate packaging at their expense (insurance is recommended) together with proof of purchase to Technical Irrigation Imports at 16 Mumford Place, Balcatta, Western Australia 6021.

Technical Irrigation Imports will repair or replace this product at its sole option at no charge to customer for parts or labour in accordance with stated warranty terms, provided that Technical Irrigation Imports or Service Agent is able to duplicate the defect or problem at its facilities.

This warranty does not apply to damage to this product that occurred as a result of incorrect installation, abuse or misuse, abnormal service or handling, thunderstorm activity, infestation by insects or vermin, moisture ingression, damage which may have been caused either directly or indirectly by another product, or if the product has been altered or modified in any way, or if the damage was caused by repairs or service provided or attempted by anyone other than Technical Irrigation Imports or an authorized Service Agent within Australia.

In no event shall Technical Irrigation Imports be liable for any indirect, incidental, collateral, exemplary, punitive, consequential or special damages or losses arising out of your purchase of products and/or out of this warranty, including without limitation, loss of use, profits, goodwill, loss or damage to landscape, fauna or crops, even if Technical Irrigation Imports has been advised of the possibility of such damages or claims.

This Warranty does not limit any conditions, warranties, guarantees, rights and remedies implied by relevant legislation in Australia, except to the extent permitted by such legislation.

Introduction	**2**
Safety, packaging, distributors	**3**
Keypad, illustration	**7**
Controller, description, features	**7—8**
Inputs, terminal strip, illustration	**9**
LED fault indicators, circuit board layout	**10**
Enclosure, mounting instructions	**11—13**
Installation Guide, illustration	**14**
RelayCube Installation Guide, illustration	**15**
General Installation, instructions	**16—17**
Programming Introduction, default controller settings	**18**
Two-Wire Devices, introduction	**19**
Water meter Pulse Resolution, introduction	**19**
KWH Meter Resolution, introduction	**19**
Two-Wire Programming Port, introduction	**20**
Quick start programming	
Menu Path of SDS Series	**21**
SDS Series Short-Cuts	**22**
Basic Time Based Program	**23**
Manual - start/stop program, start/stop stations	**23-24**
Manual - run valves	**24**
Raining-off, programs	**24**
Pausing, programs	**24**
Programming	
Current time and **Date**	**25**
Basic Program	**25**
Days On/Off, Start Time, Station Run Time, programming	**25-26**
Loop Program	**26**
Frost Program	**27**
Frost Sensors, assigning to programs	**27**
Frost Watch, monitoring time-window	**28**
Frost Watch, enable, disable	**28**
Volumetric, program	**28**
Water Meters	**29**
Water Meter Pulse Ratio	**29**
Assigning Water Meters to DataNodes & Programs	**29-30**
Auxiliary Pump, function	**30**
Auxiliary Pump, pre-wet and run times	**30**
Auxiliary Pump, activate function	**30**
Master Pumps, adding additional and assigning to programs	**31**
Pausing, program	**31**
Raining-Off, program	**31**
Percentage, run time change	**32**
Clear Programs	**32**

Manual Functions

Start Program, manually **34**
Stop Program, while running **34**
Pause Program **34**
View Active Program **34**
Start Stations, manually **34**
Stop Active Stations **34**

Information

Log, view **35**
Log, delete **35**
Faults, system **35**
Water Meter Count, total **35**
Water Meter Flow, active **35**
Default Pump Run Hours Total **35**
Power Meter, total **36**
Electrical Current Load **36**
Water Level, percentage **36**
Moisture Reading, percentage **36**
Software, current version **36**

System Settings

Water Meter Pulse, setup **37**
Auxiliary Pump Activation **37**
Precipitation, setup **37**
Delay Time, introduction **38**
Delay Times, pressure **38**
Delay Times, water meter pulse **38**
Delay Times, last station **38**

Two-Wire Devices

Valves Online **39**
Assign Valves to Stations **39**
Run Valves, manually **39**
DataValve/PumpNode Address, programming **40**
Two-Wire DataNodes **40**
Two-Wire DataNodes, configuring **40**
Two-Wire DataNodes, configuring for moisture sensors **40**
View DataNodes **41**
Assign DataNodes to Moisture Sensor **41**

Inputs

Pressure Sensor **42**
Program Start Sensor **42**
Pause Sensor **43**
Rain-Off Sensor **43**
Moisture Pre-Set, percentage **43**
Set Station Flow **44**
Flow Deviation **44**

Leak Detection **44**
Level Sensor, SDS-100 Only **44**
Weather Stations, evapotranspiration **45**
View Inputs **45**
HydroSector Programming
HydroSector, introduction **46**
HydroSector, flow chart **46**
HydroSector, steps **47**
Converting Programs to HydroSectors **47**
Auto-Programming Feature **48**
HydroSector, active days & accepting master start times **48-49**
Factory Default Settings
Setting Controller to Factory Default **49**
Fault Finding
Routine Things to Check First **50**
Replacing Plug-In Modules **50—51**
Current Draw, DataCoils **52**
Fault Finding field Valves and Cable **52**
Fault Finding Field Valves and Cable, illustration **53**
Fault Finding Two-Wire Devices **54**
Tracing the Source of a Short Circuit **54**
Tracing the Source of a Short Circuit, illustration **55—56**
Additional Fault Finding **57—58**
Cable Size Guide
Cable Size Guide, graphs **59**
Communication
3G/4G Modem **60**
Wi-Fi Module **60—61**
Entering Information via Keypad **61**
Design reference
Valve/Station, notes **62**
HydroSector, notes **63**

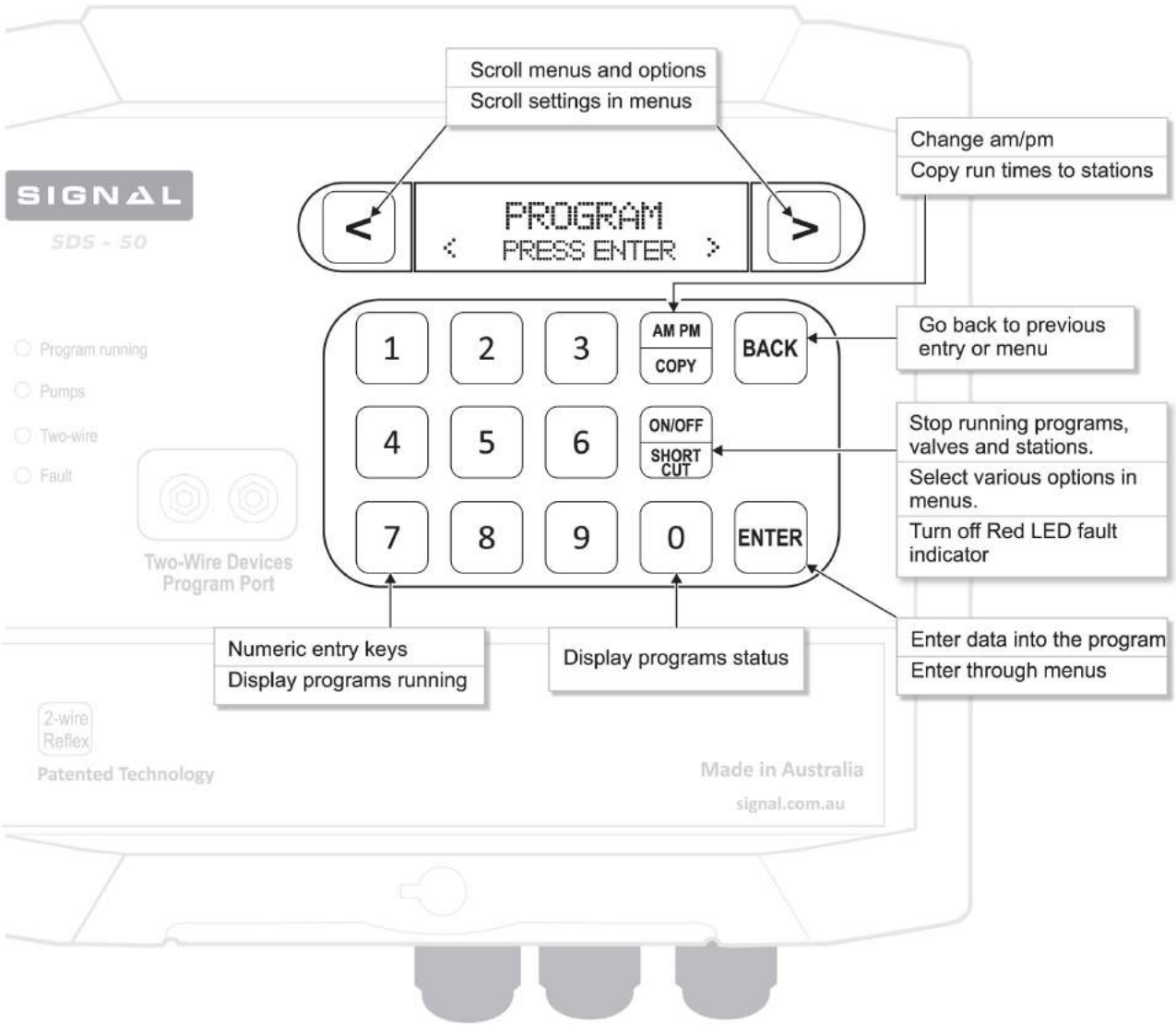

CONTROLLER DESCRIPTION — FEATURES:

- **SDS-50: 48 Station/48 Valve capacity. Activates up to 4 valves**
- **SDS-100: 96 Station/96 Valve capacity. Activates up to 8 valves**
  - Operates up to four valves at once, plus master valve/pump, plus auxiliary
  - DataCoil™ is a combined solenoid coil and two-wire decoder. Connects directly to the two-wire cable.
  - SDS Series can operate conventional (multiwire) solenoids using RelayCubes. This can be done in conjunction with two-wire DataCoils when required.

    RelayCube 1: Outputs 01—24

    RelayCube 2: Outputs 25—48

    RelayCube 3: Outputs 49—72

    RelayCube 4: Outputs 73—98

- **8 Independent programs with flexible pump assignment**
- **12 Programmable field DataNodes™ connect directly to the two-wire cable**
    - Moisture sensors (up to 4 total)
    - Water meters (1 direct + 6 two-wire)
    - Pause program
    - Stop program
    - Rain off
    - KWH meter (1 only)
    - Frost sensors (2 only)
- **7 Direct controller sensor inputs connect to the controller terminal strip**
    - Analog pressure sensor — High, intermediate and low. Set points and delays are programmable at controller.
    - Tank Level (Requires SDS-100 w/ Ultrasonic Level Sensor)
    - Digital water meter
    - Low pressure
    - Intermediate pressure (skips to next station in program sequence)
    - High pressure
    - Program start
    - Aux Meter
- **Flexible setup**
    - Programs watering in time, volume (litres) and precipitation (mm).
    - Exclusive HydroSector™ for matched precipitation zones.
    - Loop program for propagation.
    - Run times in Hr : min : secs.
    - DataValves™ can be assigned to any station.
    - DataNodes™ can be assigned to any program.
    - PumpNodes connect anywhere on the two-wire cable to pump-start relays.
    - Auxiliary pump for chemical/fertigation program.
    - Individual pumps can be assigned for each program.
    - 2 independent Frost programs
- **Online connectivity**
    - Connect online via cellular data (4G modem req.), Wi-Fi (module req.) or Ethernet (module req.).
    - *SignalCloud* central control software accessible from www.signalcloud.com & dedicated tablet app.
    - *SignalCloud Mobile* Smartphone/Tablet App available for download on Apple's App Store and Google Play for Android.

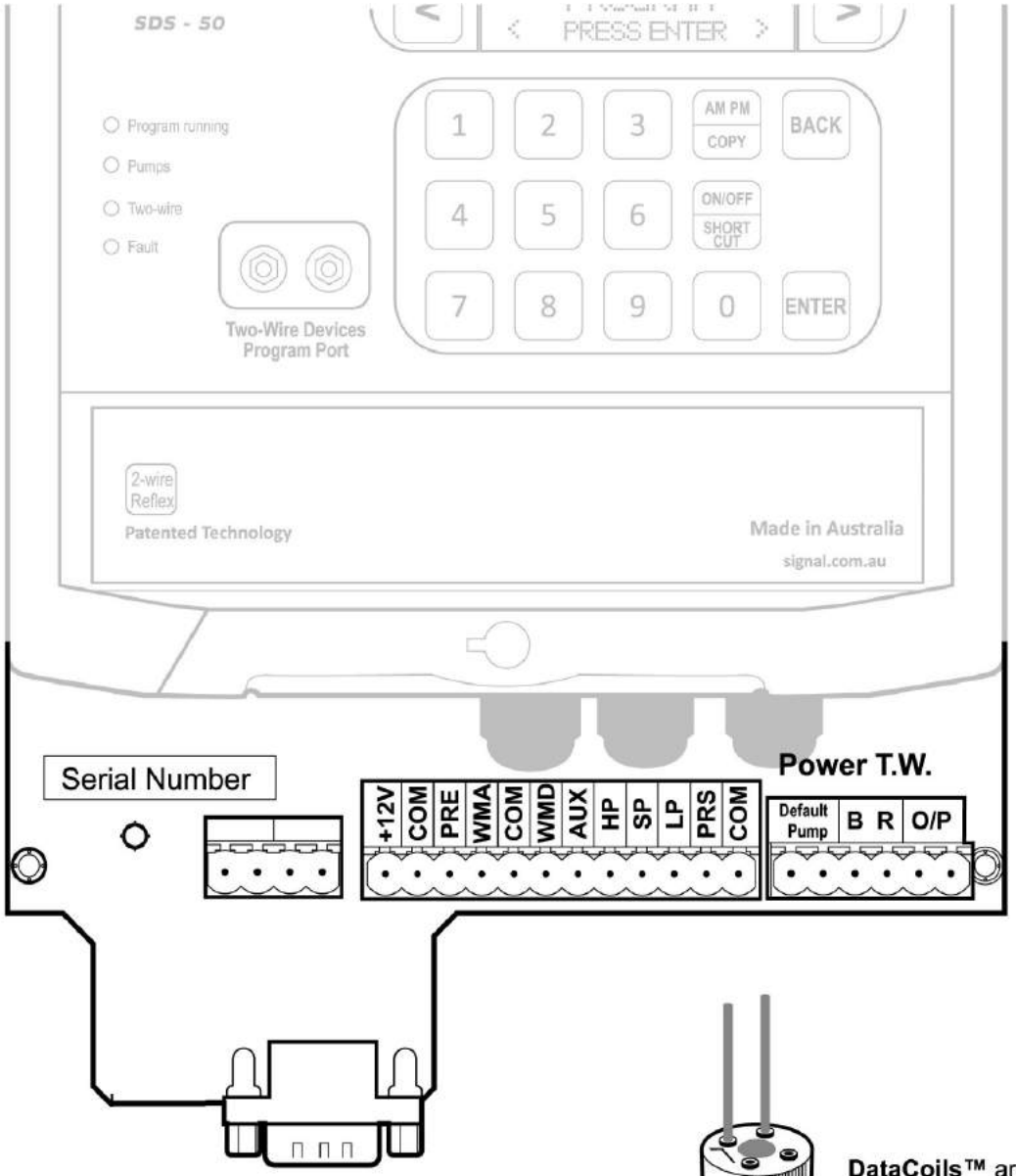

+12V	+12V (250mA)
COM	Common
PRE	Pressure sensor, 4...20mA 0-1000Kpa
WMA	Level sensor *(SDS-100 Only)*
COM	Common
WMD	Water meter, digital 0.25 Hz max
AUX	Auxiliary pump, digital 0.25 Hz max
HP	High pressure. (N/O contacts)
SP	Skip pressure, (N/O contacts)
LP	Low pressure, (N/O contacts)
PRS	Program start, (N/O contacts)
COM	Common
B	Black wire, VDC power supply
R	Red wire, VDC power supply
O	Two-wire output
P	Two-wire output

DataCoils™ are an intelligent solenoid coil eliminating the need for separate valve de-coders. DataCoils™ report their status back to the controller.

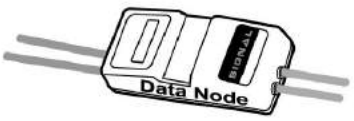

DataNodes™ – Three types are used.

- *"CN"* Digital counter input: (water meters)
- *"SW"* N/O contact: (frost, pause, stop program, rain)
- *"MO"* Moisture: (calibrated to the sensors analog output and comes complete with sensor)

PumpNodes output to pump start relays. 24VAC, 60mA

CHECKING CIRCUITRY FOR FAULTS:

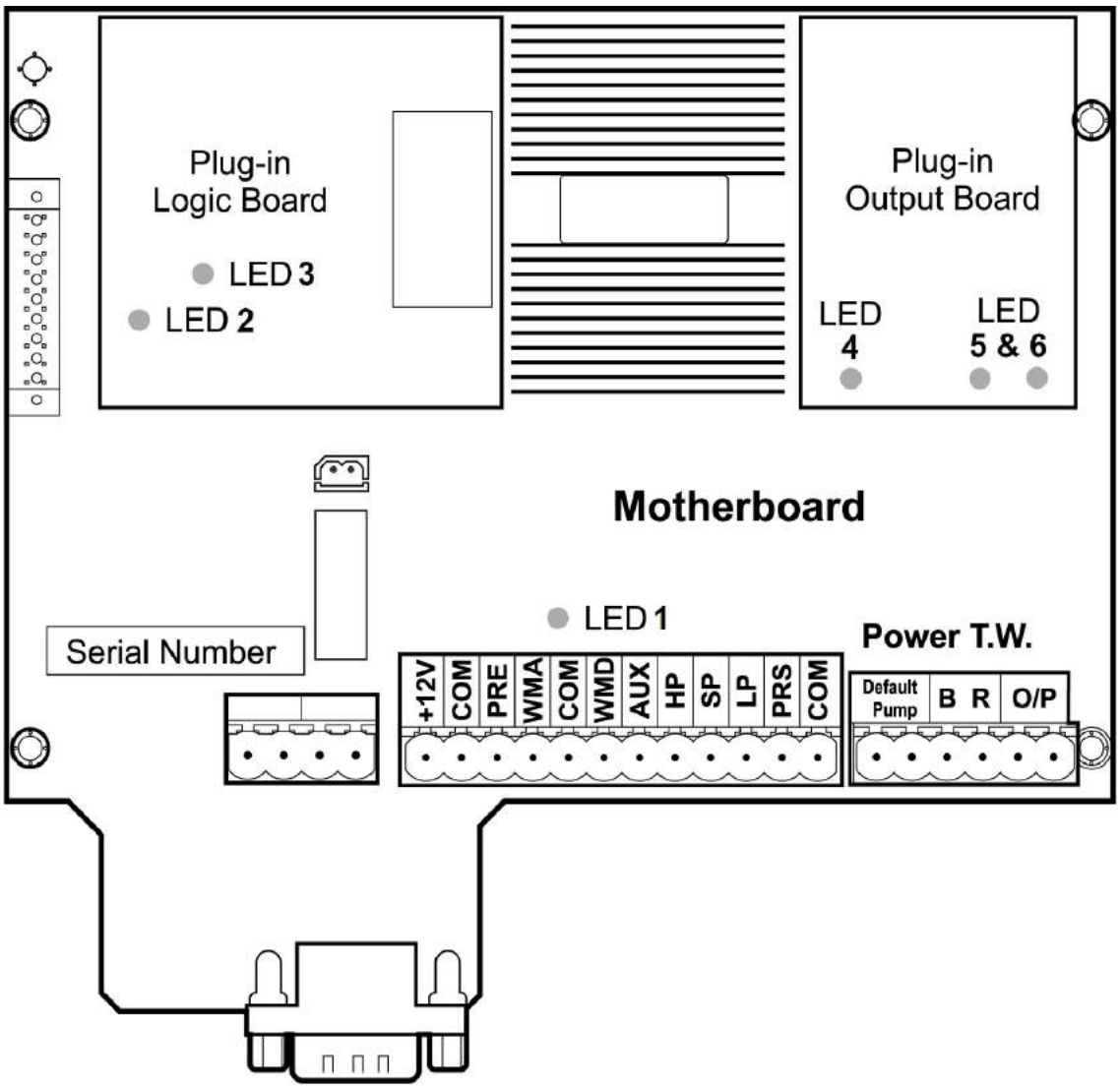

Led 1 = Power OK at Motherboard

Led 2 = Power OK at Micro Controller Board

Led 3 = (Flashes) = Micro Controller is OK

Led 4 = Power OK at Output Board

Led 5/6 = Two-Wire Power Output is ON

SDS SERIES ENCLOSURE & MOUNTING:

View of controller with front clear lid open in first detent position. The front lid can be opened at 90 and 180 degrees to the front panel.

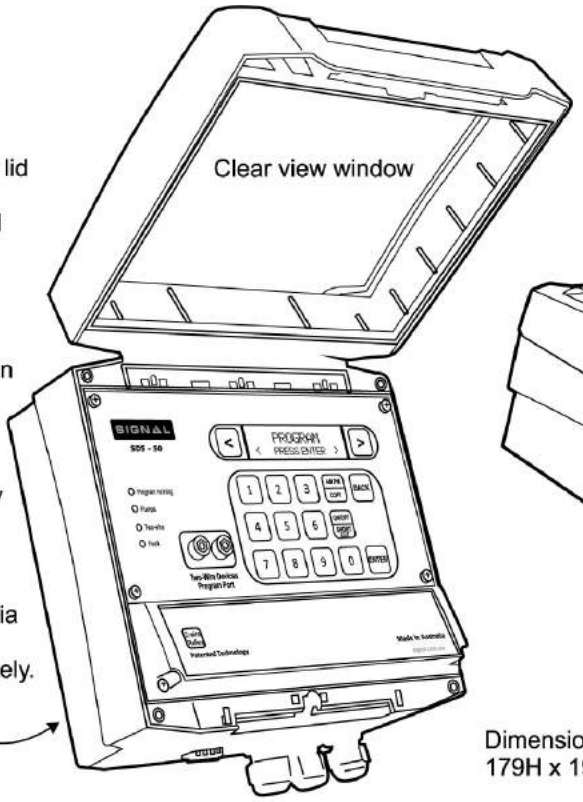

- Modern design, quality European manufactured enclosure.
- Clear front panel for ease of viewing.
- Heavy construction for durability
- Secure bottom latch

Press firmly with both thumbs to ensure catch is fully engaged.

Push firmly with both thumbs to release catch.

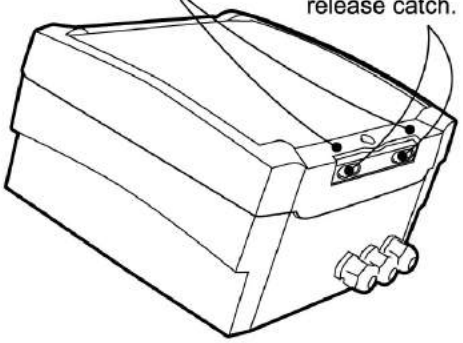

View of controller with front clear lid closed.

Box can be mounted on DIN rail via mounting holes on back of unit. DIN rail brackets supplied separately.

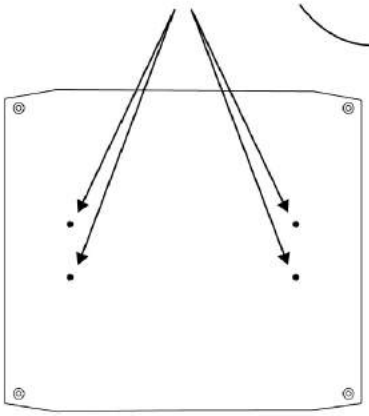

Dimensions:
179H x 199W x 106.5D

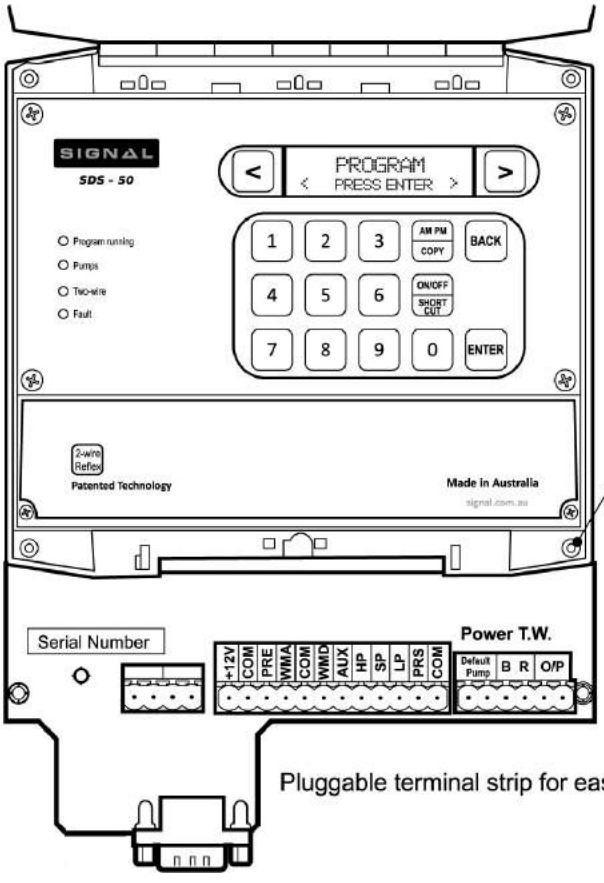

View of box with lid removed.
If directly fixing to wall etc Mounting holes are accessed each corner of box with lid fully opened.

Terminal strip compartment easily accessible by two screws

Pluggable terminal strip for ease of service and installation

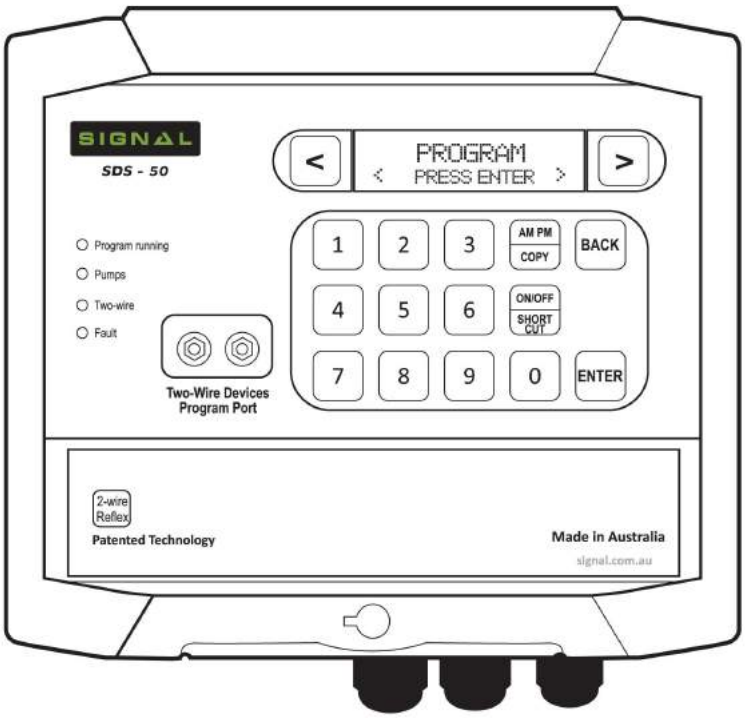

Dimensions:

179H x 199W x 106.5D

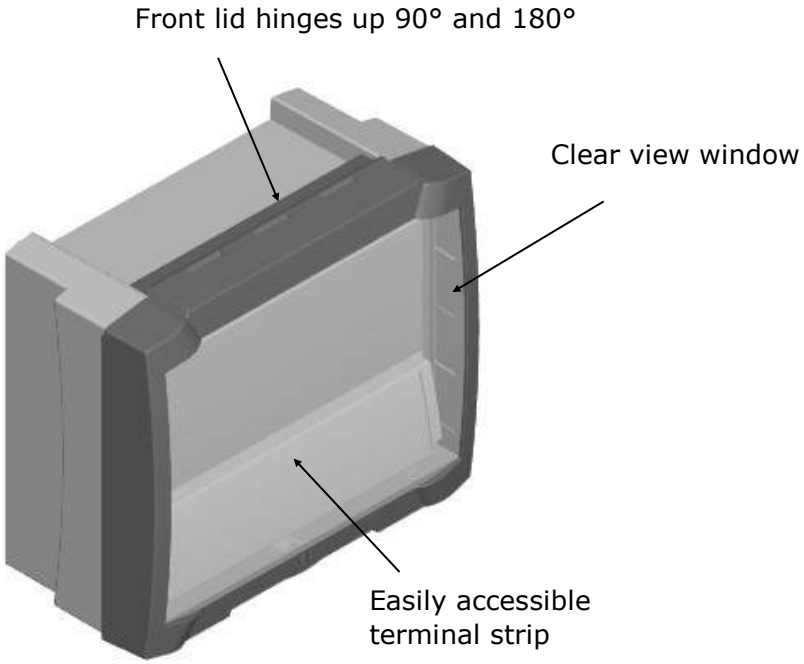

(NEW) CLIP-ON FRONT PANEL

- **Push down to secure**
- **Pull up to remove**

- **Screw down at bottom**

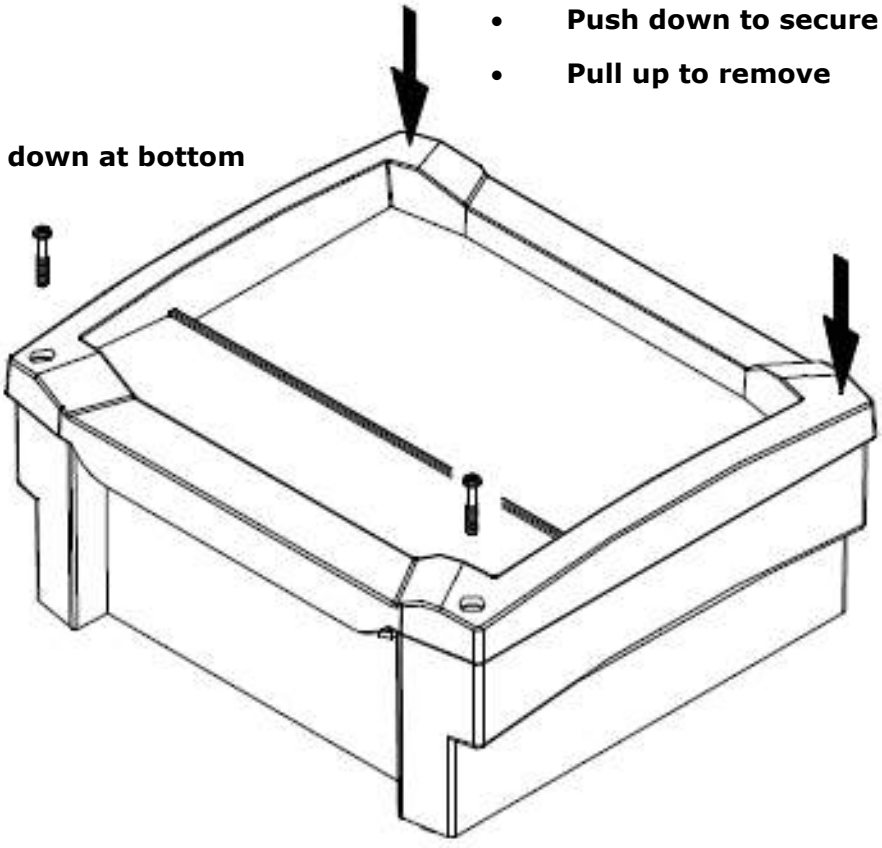

INSTALLATION GUIDE:

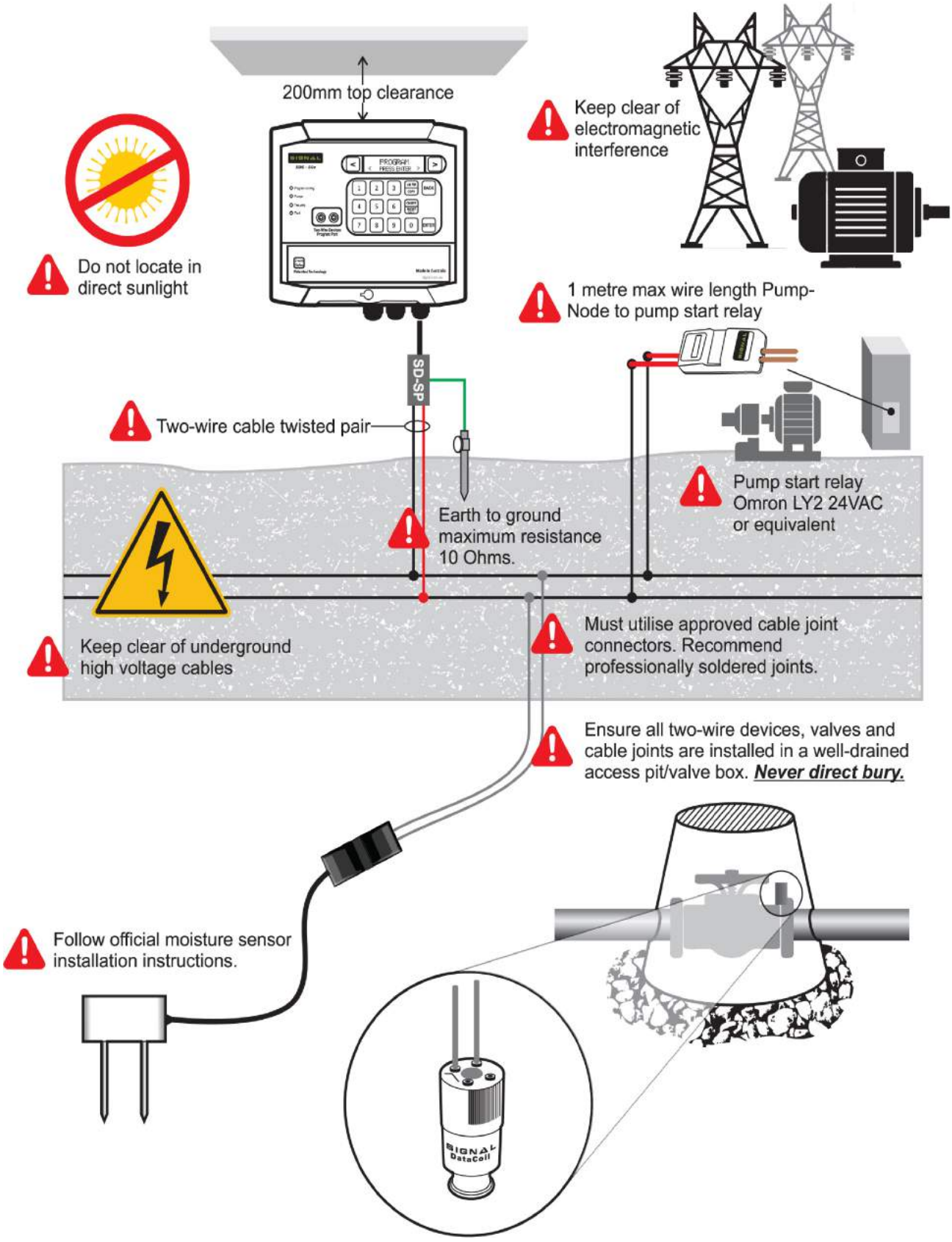

SD-DR-1 and SD-DR-2 Relay module (RelayCube)

Lightning protection

Do not connect Two-wire cable directly to the controller. Install the SD-SP device to the controller terminals [O/P] connect to ground stake 10 Ohms or less resistance to earth.

Locate as close as possible to ground earth stake.

Two-wire DataValves and direct wired solenoid valves can operate simultaneously.

Twisted pair cable

SD-SP

To field two-wire devices

The SD-DR-1 relay module (RelayCube) can be connected anywhere along the two-wire cable network. A separate 24 volt AC power supply is required to provide power to standard 24VAC solenoid coils. Relay module SD-DR-1 has a capacity of 1-24 outputs. A fuse is fitted for field short circuit protection.

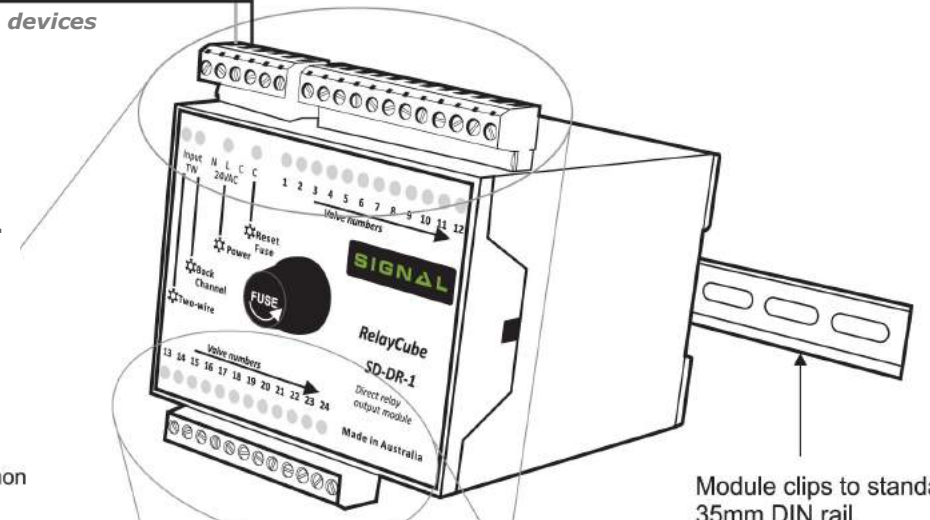

Module clips to standard 35mm DIN rail

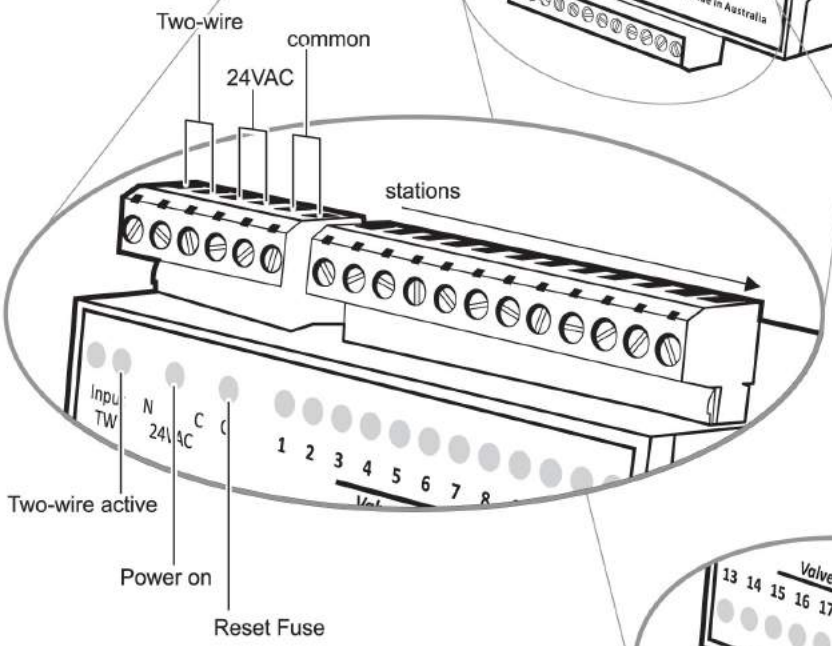

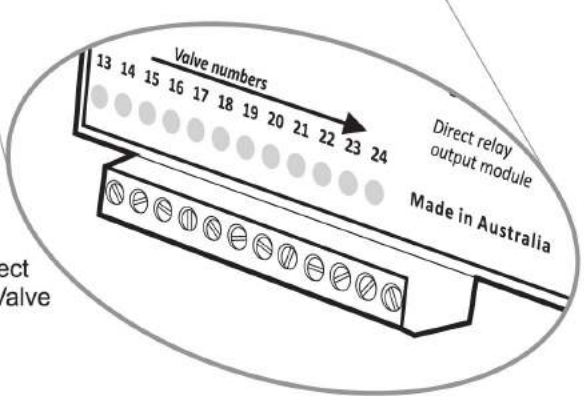

Any unused outputs can be addressed to DataValves™. For example if only ten direct outputs are used, the field two-wire DataValve capacity would be 38.

OPERATIONAL AND ENVIRONMENTAL REQUIREMENTS:

- Ambient operating Temperature 0 to 55 degrees centigrade maximum.
- Main supply voltage for controller power supply 100—240 VAC 50/60Hz
- Ensure adequate air ventilation to assist cooling if installed in cubicle.
- Power supply must be installed by a qualified electrical technician.
- Use only the power supply supplied with the controller or a recommended alternative by Signal Data Systems.
- Position the controller **away from direct sunlight** and water spray.
- Avoid close proximity to possible electromagnetic interference and particularly close proximity to VSD devices unless they meet all the manufactures installation requirements. Signal Data Systems recommend a distance of **5 meters from possible sources of electromagnetic interference.**

MOUNTING CONTROLLER:

- Locate at an easy viewable eye level with a minimum **top clearance of 200mm** for lid to be fully opened.
- Allow sufficient space at the bottom of the controller for conduits and cable.
- Some installations may require a separate terminal strip mounted in close proximity to the controller if large gauge two-wire cable is used.
- Mount the controller using **all four** mounting points on a flat level surface.

WIRING CONNECTIONS TO CONTROLLER:

- Install the controller's VDC power supply in close proximity to the controller.
- The controller is supplied with quick disconnect terminal strips. It may be convenient to unplug the terminal strips to terminate the wiring, they can then be plugged back into their headers on the PCB motherboard.
- Connect the 36VDC RED / BLACK power leads to the R and B terminals at the controller.
- Sensor cables should be not greater than .2mm² **(AWG24)** when directly wiring into the controller terminal strip. The two-wire terminals [O/P] are connected to the SD-SP filter/protection device. See next section **Lightning Protection**
- Connect the PumpNode™ RED wires to the two-wire cable, BROWN wires to the pump start relay. Ensure the pump start relay is a low current rated device at **maximum 24VAC 65mA** (Omron LY 24VAC series)
- When installing a direct relay module SD-1-DR (RelayCube) it will require a separate 24VAC power supply. Please ensure this is rated a minimum of 1 amp.
- The RelayCube™ can be mounted anywhere that is convenient along the two-wire cable provided a 24VAC power source is available.
- **Do not earth** the 24 VAC at the RelayCube™. See page 15.

LIGHTNING PROTECTION:

- For lightning protection to be effective the energy of the strike needs to be instantly gated to earth.
- Connect the ORANGE wires from the SD-SP surge arrester to the O/P terminals at the controller.
- For best results flat braided cable is used to connect to an earth stake of at least 2 metre length with a resistance to earth of 10 Ohms or less. Locate the SD-SP as **close as possible** to the earthing stake.
- For additional protection, install SD-SA filter/arrestors every 300 meters or every 16 valves. Connect to an earth stake with a resistance of 10 Ohms or less to earth.

Note: A 10 Ohm or less resistance to earth can be difficult to achieve in sandy soils. To reduce the damaging effects of lightning follow these three rules:

1. Ensure that no bare cable conductors are in contact with the soil.
2. Use only approved direct bury cable connectors and be careful not to nick the inner cable insulation and thus exposing bare copper conductors.
3. Do not direct bury. Make sure that the DataNodes™ and DataValves™ are installed in well drained valve boxes and are not subject to flooding or prolonged emersion in water.

TWO-WIRE CABLE REQUIREMENTS:

- **Signal twisted pair cable** with tinned copper conductors certified for direct burial is recommended for optimum performance.
- Signal recommends all two-wire cable joints should be soldered in a professional manner for maximum reliability. If not soldered, they must be **tightly** twisted together for a minimum distance of 30mm then clinched over. **It is the installers responsibility to provide low resistance water tight cable joints.**
- Waterproof connectors must be certified for below ground use. Direct bury connectors are **not suitable** for permanent submersion in water unless specifically rated. Long periods of full emersion will cause connector failure.
- Great care should be taken to ensure the cable insulation is not compromised, i.e. nicks in the inner cable insulation etc. **It is the installers responsibility to ensure there is no electrical leakage to earth in the cable network.**
- Ensure the two-wire cable is well distanced from high voltage cables. If the cable crosses a high voltage line it must be at right angles with a minimum clearance of 600mm.
- Never install the two-wire cable in the same conduit or strapped to any electrical high voltage cable.

Note: Australian Standards for Lightning protection to be effective is 10 Ohms or less resistance to earth.

PROGRAMMING INTRODUCTION:

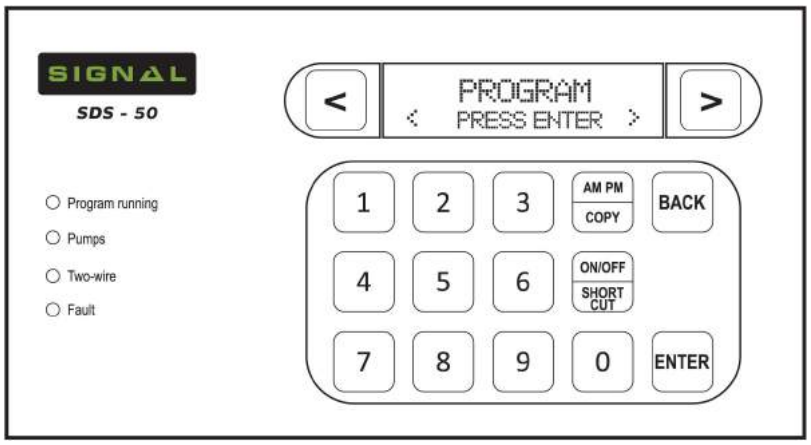

The key pad is a soft touch design with a audible beep to confirm contact. If a key is held down it will fast repeat. This is most helpful in the **Scroll** and **Back** keys.

The menu system is designed to make programming simple and intuitive. The controller is capable of basic programs or complex programs by entering further into the menus.

When the controller is not in use the display backlight and power to the two-wire cable shuts down after 3 minutes. When pressing a key the backlight and power to the two-wire cable will activate.

Use the **Back** key at any time to return to previous entry or keep pressing to return to the current **Time and Date** display

The **Setting basic program** at the beginning of this guide uses default factory settings for master valve/pump, program mode and time/volume option.

The controller **programs status** can be viewed at anytime by pressing the **"0"** key:

A= Programmed
P= Program in Pause

F= Frost program enabled
f= frost program disabled
R= Program in Rain off

Controller default settings are:

No station run times
All days on
Water meter 1 assigned to all programs
No loop cycle
Pump 49, Aux 50 (SDS-50)
Pump 97, Aux 98 (SDS-100)
No Prg start times
Time mode (not volumetric)
% set at 100%
No station delay
No manual Stn time
No manual Stn pump selected

Valves assigned to corresponding stn numbers.
All DataNodes™ nil input and un-assigned
Analog pressure sensor, no settings
Pressure sensor at controller Digital inputs
Pressure sensor delay, LP 02min SP 03sec HP02sec
Moisture pre-set at 75
Pause sensor– no programs
Rain off sensor—no programs
Program start sensor– program 8.
Water meter pulse– 1 pulse = 1 litre
Precipitation all HydroSectors™ - 12mm
No HydroSectors™ selected
Frost watch disabled

SDS Series controllers have a two-wire output that supplies electrical power and a communication protocol to operate either 48 DataValves™ (SDS-50) or 96 DataValves™ (SDS-100) and up to 12 DataNodes™. In addition, it's supplied with a pump start PumpNode™. The default address for this device is set at 49 (SDS-50) or 97 (SDS-100). The controller can operate an auxiliary pump which is typically used for chemical or fertiliser dosing. The default address for this is 50 (SDS-50) or 98 (SDS-100). If more pumps are in use they should be programmed at a lower number.

TWO-WIRE DEVICES:

DataNodes™ have 12 addresses and are numbered as such (1-12) in the TWO-WIRE menu.

Three variations of DataNodes™ are used. There inputs are: N/O contact **(SW)**, Counter **(CN)**, Moisture **(AN).** DataNodes™ can have the following functions assigned to them at the controller:

Moisture *	**(AN)**
Pause	**(SW)**
Rain on/off	**(SW)**
Stop program	**(SW)**
Water Meter	**(CN)**
KWH meter	**(CN)**
Frost	**(SW)**

* The analog output of the moisture sensors are calibrated. The set-points can be programmed at the controller.

After the functions have been assigned they are connected to the programming port.

The menu prompts for the TW-device number. After it is selected and entered the settings are downloaded to it. **Caution:** Once disconnected from the port the setting is permanent.

Moisture sensors are programmed in the same manner.

Pause sensors, N/O contact input. When activated (closed contact) the program/s the sensor is assigned to will suspend irrigation until the sensor de-activates, then resume again.

Rain on/off, N/O contact input, stops irrigation until next start time.

Stop program sensor, N/O contact will stop active program/s that have been activated by the **Start Program** sensor input at the controller.

Water meters are assigned to programs, pulse resolutions supported are 1 X 1L, 1 X 10L, 1 X 100L and 1 X 1000L. Maximum pulse rate is 1 pulse every 4 seconds.

KHW resolution is 1 x 1KWH

Frost Sensor (1) & (2) two programs are available for frost. Sensor (1) will activate program 7 and sensor (2) will activate program 8.

DataValves™ are programmed by entering its number (address) at the controller. After the address is selected it is then connected to the programming port and downloaded.

PumpNodes have a **2.9 VDC output**, they activate **24VAC** pump-start relays (65mA max) and are optimised for **Omron LY 24VAC** series relays. The address number at each of the 8 programs is set at default 49 (SDS-50) or 97 (SDS-100) for Master pump and 50 (SDS-50) or 98 (SDS-100) for Auxiliary pump. In the program menu an option is displayed for the pump address which can be selected to a different number and therefore have different pumps per program. After a number (address) is selected the TW-Device (PumpNode) is then connected to the programming port for downloading of its setting.

CONTROLLER TWO-WIRE PROGRAMMING PORT:

(All two-wire devices configuration are programmed from this port, or the optional hand-held programmer)

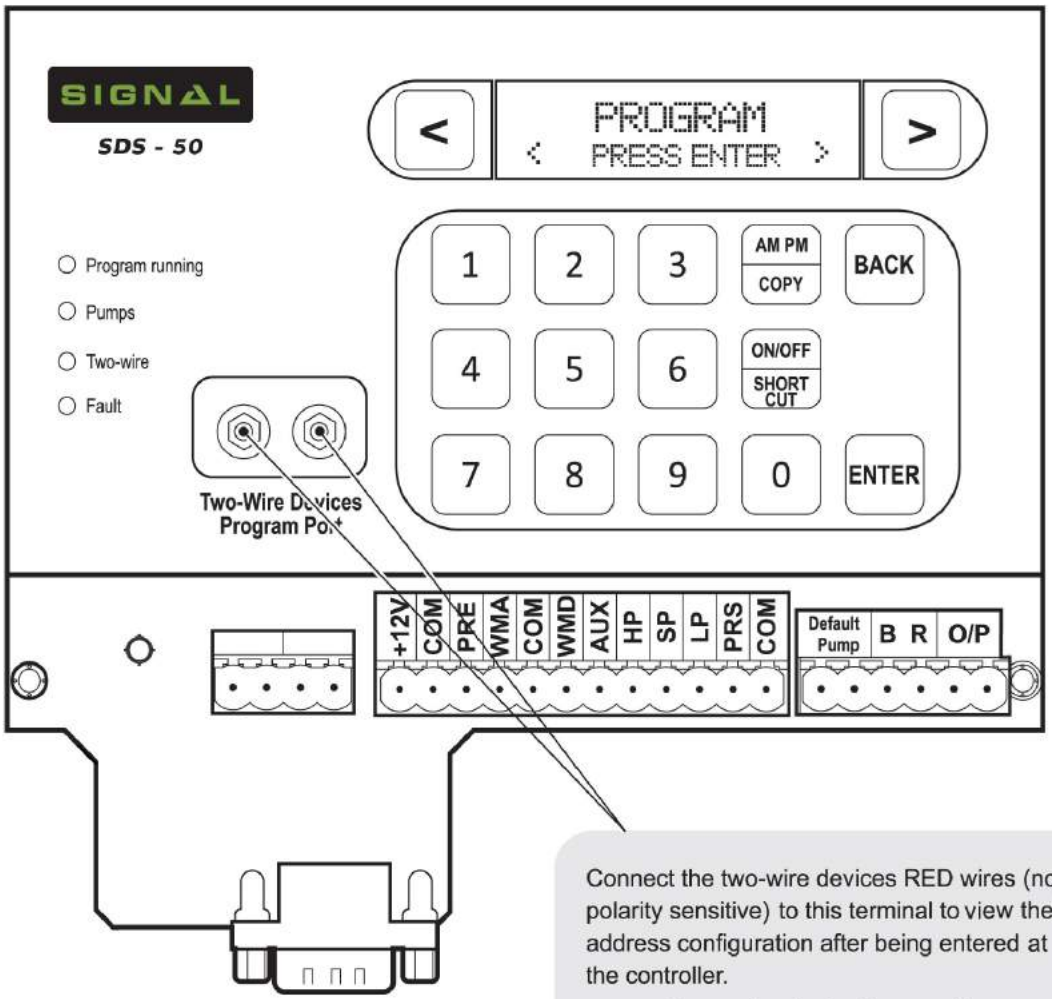

Connect the two-wire devices RED wires (not polarity sensitive) to this terminal to view their address configuration after being entered at the controller.

Ensure the device is correctly programmed before disconnection from the program port. Once disconnected, the devices configuration and address is permanent and cannot be changed!

* *DataCoil wire colour may vary depending on model.*

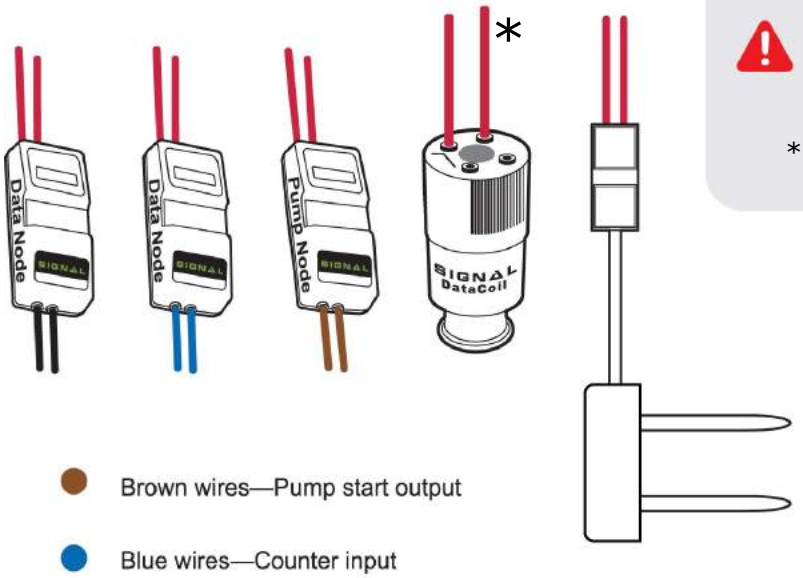

Brown wires—Pump start output

Blue wires—Counter input

Black wires—Switch input

Red wires—Two-wire network

MENU PATH OF SDS SERIES:

PROGRAM

- Program Entry
- Pause Program
- Rain-Off Program
- Program % Change
- Clear Program
- HydroSector Prg
- WM Configuration

MANUAL/TEST

- Manual Start Prg
- Manual Start Stn

INFORMATION

- View Log
- System Faults
- WM 1/2/... Total
- WM 1 Flow
- System Pressure kPa
- Power Meter kWh
- T.W. Current
- Water Level %
- Moisture Reading %
- Software Version

SYSTEM SETTINGS

- Flow Meter Pulse Rate
- Auxiliary Config
- Set Passcode
- Precipitation
- Delay Times
- FrostTime Start
- FrostTime Finish
- Frost Watch (on/off)
- Factory Default

COMMUNICATION

- Wi-Fi Mode
- Wi-Fi SSID
- Wi-Fi Passkey
- Device ID
- Device Password
- SMS Users

TWO-WIRE

- Valves Online
- Assign Valves
- Assign BoostPump
- Run Valves
- Program DataCoil
- Assign DataNodes
- View DataNodes
- Program DataNode

INPUTS

- Pressure Sensor
- Prg.Start Sensor
- Pause Switch
- Rain-Off Sensor
- Moisture Pre-set
- View Inputs
- Set Station Flow
- Flow Deviation
- Leak Detection
- Level Sensor (SDS-100)

TIME & DATE

- Enter The Time
- Enter Date D/M/Y
- Set Time Format

SDS SERIES MENU SHORT-CUTS:

View Program Status:

From the current **Time and Date** display press [0]

```
P1 2 3 4 5 6 7 8
A A P P R R f f
```

Note: A = Active, P = Paused, R = Rained-Off, F = Frost Program Setup + Enabled
f = Frost Program Setup + Disabled

View Last Program Start/Stop Details:

From the current **Time and Date** display press desired program number. ie: [1]

```
P1   Last Stopped
00:01:00—12/03
```

View Details of Active Program:

From the current **Time and Date** display press desired active program number. ie: [1]

```
P1 N M49B00 100%
S01      00:19:30
```

Note: P1 = Program 1, N = Program type (Normal), M49B00 = Master Pump 49, Booster Pump 00 (Off), 100% = Program set percentage, S01 = Active station, 00:19:30 = Station countdown in hh/mm/ss.

(cont) View Currently Active Valves:

From the program information screen shown above:

```
P1 N M49B00 100%
S01      00:19:30
```

[AM PM / COPY]

```
V  01  03  07  49
```

When Entering a Program—Enable/Disable Start Times:

Enter a Program as usual before reaching the Start Time display:

```
<P1   Start Time1>
NONE
```

[ON/OFF / SHORT CUT]

```
<P1      Start Time1>
06:00:00  AM
```

Skip Forward/Back Stations while Manually Testing:

While manually running stations, key the desired station number, then press: [ENTER]

```
Man.Stns Run
Stn No.1( 09:30)
```

Station countdown displayed

(cont) From Another Screen, Return to Active Manual Station Display:

From the current **Time and Date** display press [AM PM / COPY]

```
Man.Stns Run
Stn No.1( 09:30)
```

From here, stations can be skipped forward/back, as above

View Fault (When Red LED is Showing):

From the current **Time and Date** display press [ENTER]

To clear fault press: [ON/OFF / SHORT CUT]

To Switch Pressure Transducer from Digital to Analogue (Transducer):

Navigate to INPUTS menu within controller: [ENTER]

```
Pressure Sensor
Digital Inputs
```

[ON/OFF / SHORT CUT]

```
Pressure Sensor
L000 S000 H000
```

Note: L = Low. S = Skip, H = High

QUICK START PROGRAMMING:

For a **basic time based program** running one pump or master valve with the correct current time and date already set on the controller - Follow the easy step by step guide below to get started:

From the current **Time and Date** display scroll [>] **PROGRAM** < Press Enter > [ENTER] [ENTER] Select program number

[ENTER] < P# Mode > Normal [ENTER] P# Master Pump Default [ENTER]

P# Water Days SMTWTFS SMTWTFS Use < > keys to select days [ON/OFF SHORT CUT] [ENTER] P1 Day Options NONE [ENTER]

< P1 Start Time 1 > NONE [ON/OFF SHORT CUT] < P# Start time# > 00 : 00 : 00 Am Enter time and select AM/PM [AM PM COPY]

Use < > keys for additional starts [ENTER] <P# Option > Time [ENTER] <P# WaterStn 01 00 : 00 : 00 100%

Enter run times with numeric keys Hr:min:sec Use < > keys to advance more stns [ENTER] Or copy run times to next stns [AM PM COPY] [ENTER]

P# station Delay 00 Secc (0-30) [ENTER] P# Total Water 00:00:00 [ENTER] Start Time Overlap NONE

[ENTER] Current Water % 100% [ENTER] To return to the **Time and Date** display hold the **Back** key down [BACK]

A basic program is now entered to run on a time basis. The pump/master valve number is 49 (default for SDS-50). No delays between stations have been set. No auxiliary/chemical injection program has been set to run. The program was not optioned for looping so it will start at the programmed times and finish at the end of the last station run time in a program. All default settings have been used.

VIEW PROGRAMMING STATUS:

To check programs status press **"0"** at the current Time and Date display. You will see "A" displayed beneath the program you have just completed. See page 22.

MANUALLY START & STOP PROGRAMS:

From the current **Time and Date** display scroll [>] MANUAL/TEST < Press Enter > [ENTER] Manual Start Prg < Press Enter >

[ENTER] Program Type < Normal Program > [ENTER] Enter Program 1 Select program number

Program %[0-250] 100 [ENTER] **To stop program** [ON/OFF SHORT CUT] Select program number [ENTER]

MANUALLY START/STOP STATIONS:

MANUAL/TEST
< Press Enter > → ENTER → Manual Start Prg
< Press Enter > → >

Manual Start Stn
< Press Enter > → ENTER → Set From / End Stn
From ## End ##

Select station numbers from keypad

ENTER → Set Station Time
00 : 00 Ms

Use numeric keys to select min : sec → ENTER → < Master Pump >
start delay 00 : 00

Use **< >** keys to select different pump option **and/or** Use numeric keys in min : sec if a delay is wanted before the manual start begins → ENTER

To manually advance to another station use the numeric keys for the stn number → ENTER

To stop manual stations → ON/OFF SHORT CUT

MANUALLY RUN VALVES:

Valves will operate without starting pumps or master valves. A useful function for testing.

From the current **Time and Date** display scroll → TWO-WIRE
< Press Enter > → ENTER → Use **< >** keys to scroll to the **"Run Valves"** display

ENTER → Select Valves
#00 #00 #00 #00

Use numeric keys and **< >** to next valve → ENTER → Set Run Time
00 : 10 : 00

Use numeric keys to set hr:min:sec and press enter to start → ENTER

To stop valves running → ON/OFF SHORT CUT

RAIN-OFF PROGRAMS:

From the current **Time and Date** display scroll → Program
< Press Enter > → ENTER → Program Entry
< Press Enter >

> → Rain-Off Program
< Press Enter > → ENTER → Rain-Off program
1 2 3 4 5 6 7 8

Use **< >** keys to select programs

ON/OFF SHORT CUT → ENTER → RainOff Duration
< Permanent >

Use **< >** keys to select between Raining off Permanently, or for 24/48/72/96 hrs → ENTER

To de-select Rain-Off repeat above steps and use **< >** keys to select program → ON/OFF SHORT CUT → ENTER

PAUSING PROGRAMS:

Same as Rain-Off, but scroll only to the **"Pause Program"** display, see above. Permanent Pause is the only option.

SETTING TIME & DATE:

On first powering up, the time will need to be set to your current time and date. The controller will display this

Current Day Date
Current time

< | TIME & DATE / < Press Enter > | ENTER | Enter The Time / < Press Enter > | ENTER

Enter The Time
00 : 00 : 00

Use scroll **< >** keys and enter the current time with numeric keys. Note it is in hr:min:sec ENTER

> | Enter Date D/M/Y / < Press Enter > | ENTER

Use scroll **< >** keys and enter date with numeric keys ENTER >

Set Time Format / < Press Enter > | ENTER | Set Time Format / < 12 Hours >

To select 12hr or 24hr ENTER BACK

Note. The SDS-50 controller is factory default set for the **DataCoils™** to be assigned in a matching numeric sequence, i.e. [Station (1) is valve (1)], [Station (2) is valve (2)] etc. If you wish to change this, proceed to section **TWO-WIRE—Assign Valves.**

Default for the master pump is number 49. This PumpNode is supplied pre-programmed with the controller. Additional PumpNodes can be programmed and assigned to programs for additional pumps. The programs are designed for a maximum of 1 pump per program.

If a master valve is used program a DataCoil™ at the controller TW programming port to the address number selected. (49 is default)

SETTING UP A BASIC PROGRAM:

From the current **Time and Date** display scroll > | PROGRAM / < Press Enter > | ENTER | Program Entry / < Press Enter >

ENTER Use numeric keys to select program number ENTER | < P# Mode > / Normal | ENTER

P# Master Pump / Default | ENTER | P# Water Days / SMTWTFS SMTWTFS

Use **< >** keys to select days ON/OFF SHORT CUT

When selection complete ENTER | P1 Day Options / < NONE > | ENTER | < P1 Start Time 1 > / NONE

ON/OFF SHORT CUT | < P# Start time# > / 00 : 00 : 00 Am

Enter start time with numeric keys. Hr:min:sec, select am/pm AM PM COPY

Use **< >** keys to advance to starts 2-4 ENTER | <P# Option > / Time

Use **< >** keys if selecting volumetric option

ENTER | <P# WaterStn 01 / 00 : 00 : 00 100% | Enter time with numeric keys Hr:min:sec | > | Continue with run time entries | **or**

AM PM / COPY | To copy run times to next stns | ENTER | P# Station Delay / 00 Sec (0-30) | Enter delay with numeric keys (30 sec max').

ENTER | P# Total water / 00 : 00 : 00 | ENTER | Start Time Overlap / NONE | ENTER

ENTER | Current Water % / 100% | ENTER | Return to **Date Time** display | BACK

A basic program has now been entered using default factory option settings i.e. Time based station watering, no loop program, no auxiliary program and no station delays. The Master valve/pump start is 49. On an SDS-100, this number would be 97.

Note, Station Delay: *the time before the next valve is switched on after the current valve is switched off with the pump still running. It is useful for slow closing valves due to flow or hydraulic problems.*

LOOP PROGRAMS:

A loop program is used when multiple start times are required for a program with delays between the start times over a set period of time. The loop has a start time and end time. During these times a delay is programmed (loop delay). This is the time delay before watering starts again from the first watering station and the cycle repeats until loop end time.

Program Entry / < Press Enter > | ENTER | Enter program number with numeric keys | ENTER | < P# Mode > / Normal

> | <P# Mode > / Loop | ENTER | P# Master Pump / Default | ENTER

P# Water days / SMTWTFS SMTWTFS | Use **< >** keys to select | ON/OFF / SHORT CUT | ENTER | P1 Day Options / NONE | ENTER

P# Loop Start Time / None | ON/OFF / SHORT CUT | P# Loop Start Time / 00 : 00 : 00 Am | Enter start tim in hr:min:sec | ENTER

P# Loop End Time / 00 : 00 : 00 Am | Enter time in hr:min:sec | ENTER | P# Loop Delay / None | ON/OFF / SHORT CUT

P# Loop Delay / 00 : 00 : 00 | Enter delay in hr:min:sec | ENTER | <P# Option > / Time | ENTER

<P# WaterStn 01 / 00 : 00 : 00 100% | Enter water time in Hr:min:sec | > | Repeat for next stations | ENTER

P# Station Delay / 00 : 00 Ms | Enter delay time in Hr:min:sec | ENTER | P# Total Water / 00:00:00 | ENTER

LOOP PROGRAMS continued

Start Time Overlap NONE	ENTER	Current Water % 100%	Return to **Date Time** display	BACK

FROST PROGRAM DESCRIPTION:

The controller uses program 7 and 8 for frost control. In the [TWO-WIRE] menu, two frost sensors (1 and 2) are available to assign to DataNodes. Sensor 1 will activate program 7 and sensor 2 will activate program 8. When the sensors are activated, all current irrigation activity will be stopped and a loop cycle will commence on either or both programs until the sensor deactivates.

When the **FrostWatch** function is enabled, the two-wire cable will switch on every 8 minutes for a brief period to check the frost sensor status. The **FrostWatch** monitoring time-window is selectable. Depending on the frost risk, the **FrostWatch** function can be enabled or disabled at any time via the controller keypad.

ASSIGN FROST SENSORS (1) & (2) TO DATANODE:

From the current **Time and Date** display scroll > | TWO WIRE / < Press Enter > | ENTER | Scroll to the **TW Data Nodes**

> | Assign DataNodes / < Press Enter > | ENTER | Enter DN No. / 00 (DN N0. 1—12) | Use numeric keys to enter number

< Select Input > / Nil | Scroll to Frost sensor (1) or (2) | ENTER | We will assume **(1)** was selected **program 7** is now a frost program

Note. See page 40,41 for configuring & downloading settings to DataNodes™

FROST PROGRAM:

From the current **Time and Date** display scroll > | Program Entry / < Press Enter > | ENTER | Select 7 or 8 | ENTER

ENTER | < P# Mode > / Normal | Select Normal or Loop then **Enter** | ENTER | P# Master Pump / Default

ENTER | P# Water Days / SMTWTFS SMTWTFS | The Frost program does not require active days to be set | ENTER

P1 Day Options / NONE | ENTER | < P1 Start Time 1 > / NONE | Leave the start time set to NONE for Frost Programs

<P# WaterStn 01 / 00 : 00 : 00 100% | Use numeric keys to enter run time h/m/ | ENTER | P# Station Delay / 00 : 00 Ms | ENTER

P# Total Water / 00:00:00 | ENTER | Start Time Overlap / NONE | ENTER | Current Water % / 100% | ENTER

FROSTWATCH MONITORING TIME-WINDOW:

From the current **Time and Date** display scroll > | SYSTEM SETTINGS / < Press Enter > | ENTER | >

FrostTime Start / < Press Enter > | ENTER | Frost Watch On / 00 : 00 : 00 Am | Use numeric keys to enter time h/m/s

AM PM / COPY | ENTER | > | FrostTime Finish / < Press Enter > | ENTER | As previous, use numeric keys to enter time h/m/s

AM PM / COPY | ENTER

FROSTWATCH ENABLE/DISABLE:

From the current **Time and Date** display scroll > | SYSTEM SETTINGS / < Press Enter > | ENTER | Use < > keys and scroll to **Frost Watch**

Frost Watch / < Press Enter > | ENTER | Use scroll < > keys to select Enabled or Disabled | ENTER

Note. When the Frost Watch function is enabled the status program indicator will display "**F"** (upper case). When disabled, it will display "**f"** (lower case)

To view the program status indicator, press [BACK] on the keypad until you reach the current time and date. On this screen, hit the '0' button.

VOLUMETRIC WATERING:

As an alternative to watering by time, a set volume of water can be programmed per station. The controller will then count pulses from the water meter assigned to that program. Pulse resolutions supported are: 1 litre, 10 litres, 100 litres and 1000 litres. Maximum pulse frequency is 0.25hz or 4 seconds.

Ensure the water meter pulse ratio is set in the controller, refer to **Systems Settings**, **Flow Meter Pulse,** page 29.

Enter a program as normal Until reaching <Option>: <P# Option > / TIME | > | <P# Option > / VOLUMETRIC

ENTER | <P# WaterStn 01 / 000000 Litres | Use numeric keys to enter total litres | > | Repeat for each station

ENTER | P# Station Delay / 00 : 00 Ms | Enter time from keypad in m/s | ENTER | P# Total Water / 00000000 CM

WATER METERS:

The controller supports up to 8 water meters.
Water meter (1) assigned to all programs as default setting. This is the [WMD] input terminal on the controller. This is also the only water meter which will display LIVE FLOW through the controller.

An additional 7 water meters can be connected to DataNodes anywhere along the two-wire path.

When a water meter is assigned to a DataNode this can then be assigned to a program.

Due to Water Meters 2—8 being connected by DataNodes to the system, they are assigned in a preferential numeric order to the DataNodes. For example if DataNode address 6 is first selected to have a Water Meter input — it would be assigned to WM2. If DataNode address 8 was next selected to have a Water Meter — input it would be assigned to WM3.

WATER METER PULSE RATIO:

From the **Time and Day** display scroll > | SYSTEM SETTINGS / < Press Enter > | ENTER | Flow Meter Pulse / < Press Enter >

ENTER | < M # Pulse Ratio > / 1 Pulse = 100 Ltr | Use **<** **>** keys to set pulse value | > | Use numeric keys to select next meter

Use **<** **>** keys to set pulse value and repeat as required | ENTER

WATER METERS 2-8 CONFIGURED TO DATANODES:

From the **Time and Day** display scroll > | TWO-WIRE / < Press Enter > | ENTER | Use **<** **>** keys to scroll to **"Assign DataNodes"**

Assign DataNodes / < Press Enter > | ENTER | Enter DN No. / 01 (DN N0. 1—12) | Enter desired DataNode # | ENTER

< Select Input > / Nil | Use **<** **>** keys to select water meter | ENTER | Use < > keys to scroll to **View DataNodes** display to verify

View DataNodes / < Press Enter > | ENTER | < Add. 01 Add. 02 > / X00>WM2 00>NO

← **DataNodes 1-12**
← **Sensor/Input type**

WATER METERS - ASSIGNMENT TO PROGRAMS: (default is **WM1** for all programs)

Begin in PROGRAM menu → **Program Entry** / **< Press Enter >** → **>** → **WM Configuration** / **< Press Enter >** → ENTER

Program No. # / **< WaterMeter # >**

Use numeric keys to select the program. Use **< >** keys to select the water meter number. → ENTER

Note: When assigning water meters to programs, it is the **water meter number** and not the DataNode™ that is being assigned to a program. Water meter (1) is always assigned to the controller [**WMD**] input terminal. Water meters 2—7 are assigned to DataNodes™.

Ensure the pulse ratio has been set as described previously above for each water meter.

ADJUSTING WATER METER TOTAL: (to the same reading as the water meter register)

From the current **Time and Date** display **< >** scroll → **SYSTEM SETTINGS** / **< Press Enter >** → ENTER → **Flow Meter pulse** / **< Press Enter >**

→ **>** → **Factory Default** / **< Press Enter >** → ENTER → **Default < 1234 >** / **WM Config <6021>**

Key in **6021**

< WaterMeter 1 > / **000000000 CM**

Scroll **< >** to the required water meter, use numeric keys only to key in correct total → ENTER

AUXILIARY PUMP FUNCTION:

The auxiliary is used for chemical / fertiliser injection. To activate this function, scroll through the main menu to [SYSTEM SETTINGS] and press 'Enter' then scroll and select [Auxiliary Config]. From here, use the arrow keys to select [ON].

Auxiliary pumps are activated by PumpNodes. The default auxiliary address is 50 (SDS-50) or 98 (SDS-100) for all programs. This can be changed if required.

When entering a program with the Auxiliary function is enabled, the following will display:

After the **P# Total Water** display → **P# PreWet Delay** / **00 : 00 Ms**

Use keypad to enter delay time in m/s → ENTER

P# Aux. Pump / **Default**

Default is 50/98. For different Aux pumps, select available address number under 50/98 → ON/OFF SHORT CUT → Use numeric keys to select → ENTER

<P# Aux. Stn 01> / **00 : 00 :00 100%**

Use keypad to enter Aux Station run times in h/m/s → AM PM COPY → Copy to next stations or use < > keys

Repeat for each station → ENTER

Note:

The auxiliary pre-wet is the time that the station runs without the dosing (auxiliary) pump running. The auxiliary run time is the dosing pump run time during the stations watering time. The balance of the time on the stations watering time is a post-wash time.

This function may be used for other applications.

For example, if no pre-wet delay is selected and the auxiliary run time is the same as the station/s run time, the auxiliary will run for the station/s duration. Many connotations of this are possible by manipulation of the program/s and auxiliary pump/s.

ADDING AND ASSIGNING MASTER PUMPS:

When in the **Program Entry** menu, a display of **Master Pump (Default)** will be indicated. On the SDS-50, the default PumpNode address is **49**. On the SDS-100, the default Pump-Node address is **97**. This can be changed as follows:

P# Master Pump Default	ON/OFF SHORT CUT	P# Master Pump 00	Use numeric keys to select. (Must be 49 or lower)

ENTER To program the pump start PumpNode or master valve DataValve. See page 40 **"DataValve & PumpNode Address Number Programming**

Note—The maximum address output capacity of the SDS-50 is 50. 48 valves, 1 master pump (49) and 1 Aux pump (50). The maximum address output capacity of the SDS-100 is 98. 96 valves, 1 master pump (97) and 1 Aux pump (98).

When additional pumps/master valves are programmed they use valve address numbers. Hence, when an additional 2 pumps are added, the valve numbers are reduced by 2—giving a maximum of 46 valve capacity. e.g. M/V 49, 48 47, therefore 1-46 is the new field valve capacity.

PAUSE PROGRAM:

A running program can be paused from the keypad and restarted at its pause point later

From the [PROGRAM] menu | Program Entry < Press Enter > | > | ENTER | Pause Program 1 2 3 4 5 6 7 8

Use < > keys to select program | ON/OFF SHORT CUT | To re-start program repeat above use < > keys to select program | ON/OFF SHORT CUT

RAINING-OFF PROGRAMS:

Programs can be Deactivated or Rained-Off for a period of time from the keypad, at any time they can be activated again to start at their programmed start times.

From the [PROGRAM] menu | Program Entry < Press Enter > | > | Rain-Off Program < Press Enter > | ENTER

Rain-off program 1 2 3 4 5 6 7 8 | Use < > keys to select program | ON/OFF SHORT CUT | Rain Off Duration <Permanent> | >

Use <> keys to select duration i.e. 24hr/48hr/72hr/96hr or permanent | ENTER | To re-start program repeat above use < > keys to select program | ON/OFF SHORT CUT

STATION RUN TIME % CHANGE:

Percentage change will increase or decrease the station run times in the program/s selected. The original programmed time is 100%

From the current **Time and Date** display, scroll [>] | PROGRAM < Press Enter > | [ENTER] | Program Entry < Press Enter > | [>]

Program % Change < Press Enter > | [ENTER] | Select program number | [ENTER] | Program %[0 –250] 100

Use numeric keys to enter new % | [ENTER]

Note: 100% is the original programmed time

TO CLEAR PROGRAMS:

A single program or all programs can be cleared of run times, day calendar, start times, HydroSector program allocations, station delays and master pump allocations.

From the [PROGRAM] menu | Program Entry < Press Enter > | [>] | Clear Program < Press Enter > | [ENTER]

Clear Program Program 1 [0=All] | Select program number | [ENTER]

STOP PROGRAM RUNNING:

To immediately stop a program or programs whilst they are running.

From the current **Time and Date** display, scroll [ON/OFF SHORT CUT] | Select Program Program 0 [0=All] | Enter program number from keypad. | [ENTER]

STOP STATION RUNNING:

From the current **Time and Date** display, scroll [ON/OFF SHORT CUT]

VIEW PROGRAMS RUNNING:

Operating program/s will indicate with a flashing program number/s on the display.

Display will Flash

Running Programs
1 # # # # # # #

Enter program number from keypad.

P# N M# @100%
Stn. # 00 : 00 : 00

To view the currently active stations, now press AM PM / COPY

Note:

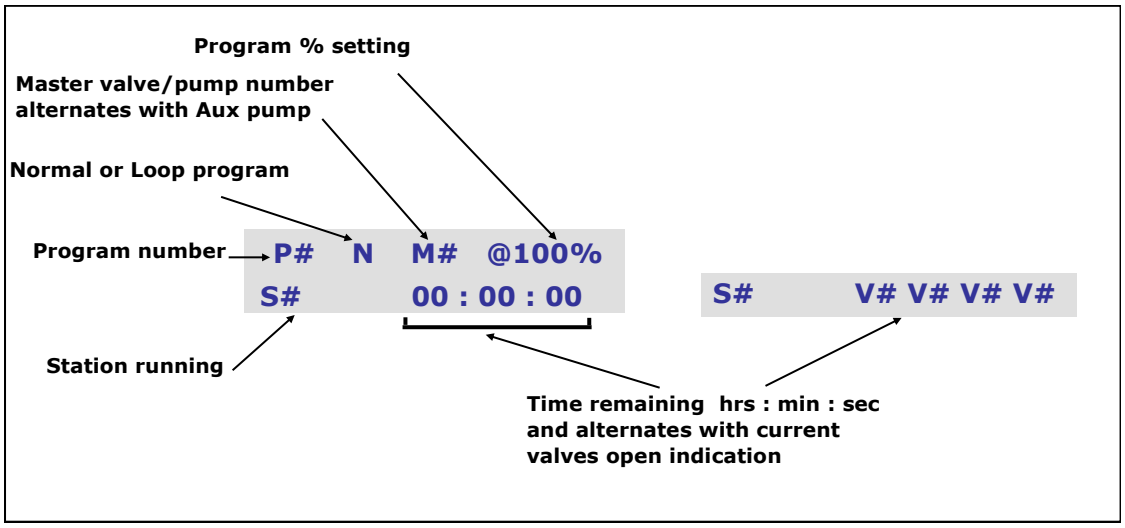

MANUAL / TEST

MANUALLY START A PROGRAM:

From the current **Time and Date** display scroll [>] | MANUAL/TEST < Press Enter > | [ENTER] | Manual Start Prg < Press Enter >

[ENTER] | Program Type < Normal Program > | Use **< >** to select Normal Program or HydroSector | [ENTER]

Enter Program No? 1 | Use numeric keys to enter selection | [ENTER] | Program %[0-250] 100

Use numeric keys if a % change is required | [ENTER]

To stop a running program, press [ON/OFF SHORT CUT] | Use numeric keys to select program | [ENTER]

MANUALLY START/STOP STATIONS:

From the current **Time and Date** display scroll | MANUAL/TEST < Press Enter > | [ENTER] | Manual Start Prg < Press Enter > | [>]

Manual Start Stn < Press Enter > | [ENTER] | Set From / End Stn From ## End ## | Select station numbers from keypad

[ENTER] | Set Station Time 00 : 00 Ms | Use numeric keys to select m/s | [ENTER] | < Master Pump > Start Delay 00 : 00

Use **< >** keys to select different pump option **and or** Use numeric keys in min : sec if a delay is wanted before the manual start begins | [ENTER]

SKIP STATIONS FORWARD/BACK:

From the current station countdown screen, simply enter the desired station number, then; [ENTER]

VIEW MANUAL STATIONS CURRENTLY RUNNING:

If the current Station countdown is not currently displayed, press **BACK** Go to the current **Time and Date** display. **"M"** will flash indicating manual STNs running; [AM PM COPY]

Man. Stns M# Stn No. ## (00 : 00) | From here, stations can be skipped FORWARD/BACK as seen in step above.

STOP MANUAL STATIONS:

[ON/OFF SHORT CUT]

INFORMATION

VIEW LOG:

Up to 999 events are held in memory

From the current Time and date display scroll > | INFORMATION < Press Enter > | ENTER | >

View Log < Press Enter >	ENTER	Use scroll keys < > to view	## Date Time Event

SYSTEM FAULTS:

INFORMATION < Press Enter >	ENTER	>	System Faults < Press Enter >	ENTER

Current fault will be displayed

To clear fault indicator ON/OFF SHORT CUT

WATER METER COUNT TOTALS (m^3):

INFORMATION < Press Enter >	ENTER	>	WM—1 Total 0000000000 CM

Use numeric keys to select next meter

Note: To reset water meter reading, or enter existing total, see page 30.

WATER METER FLOW RATES:

INFORMATION < Press Enter >	ENTER	>	WM—1 Total 0000000000 CM	>

WM—1 Flow 00000 L/Minute

Use numeric keys to select next meter

DEFAULT PUMP RUN HOURS*:

INFORMATION < Press Enter >	ENTER	>	WM—1 Total 0000000000 CM	>

Use numeric keys and press '8'

Default Pump Hrs 0000176.37 hm

*requires FW 10.0 and above

POWER METER TOTAL:

INFORMATION < Press Enter >	Use **< >** keys to advance to **Power Meter** display	**Power Meter** **0000000 KWH**

ELECTRICAL CURRENT LOAD:

INFORMATION < Press Enter >	Use **< >** keys to advance to **TW Power** display, as milliamps.	**TW current** **0000mA**

WATER LEVEL %:

INFORMATION < Press Enter >	Use **< >** keys to advance to **Water Level** display. Shown as %	**Water Level** **000%**

Note: Only available in SDS-100. Requires Signal ultrasonic level sensor.

MOISTURE READING:

INFORMATION < Press Enter >	Use **< >** keys to advance to **Moisture Reading** display **> Enter**.	**M1 M2 M3 M4** **00 00 00 00**

Note: Moisture level shows under each sensor. A total of 4 can be installed per site. Each moisture sensor is assigned to a program and may be given a pre-set point to override irrigation.

SOFTWARE VERSION:

INFORMATION < Press Enter >	Use **< >** keys to advance to **Software Version** display

SYSTEM SETTINGS

WATER METER PULSE:

Note: It is necessary to set the pulse ratio to match the water meter output pulses

From the **Time and Day** display scroll > | SYSTEM SETTINGS / < Press Enter > | ENTER | Flow Meter Pulse / < Press Enter >

ENTER | < M # Pulse Ratio > / 1 Pulse = 1 ltr | Use < > keys to set pulse value | > | Use numeric keys to select next meter

Use < > keys to set pulse value | ENTER

AUXILIARY PUMP ACTIVATION:

This function activates the auxiliary pump program.

From the **SYSTEM SETTING** display | ENTER | > | Auxiliary Config / < Press Enter > | ENTER

< Auxiliary Pump > / OFF | Use < > keys to activate auxiliary pump function | > | ENTER

PRECIPITATION:

Used when irrigating via HydroSector programming. This function sets the precipitation rates for each HydroSector.

From the **System Settings** display | ENTER | Use < > keys to advance to **Precipitation** display | Precipitation / < Press Enter > | ENTER

< HydroSector 1 > / 12mm ← **12mm is the default setting** | Use numeric keys for new value, use < > to next HydroSectors and repeat | ENTER

DELAY TIMES:

This menu has three delay parameters. **Pressure Delay**, **Water Flow Delay and Last Station On Delay.**

PRESSURE DELAY:

An analog pressure sensor connected to the [**PRE]** terminal at the controller, or digital sensors connected to the [HP] - [SP] and [LP] terminals, will stop all irrigation after a pre-set time delay on Low and High pressure.

It will skip a valve when the pressure reaches the Skip [SP] (intermediate pre-set pressure.)

From the **System Settings** display ENTER Use **< >** keys to advance to **Delay Time** display

Delay Time
< Press Enter >

ENTER

Pressure Delay
L02m S03s H02s

The display indicates Low Skip and High pressure at the default settings L. min S. sec H. sec

Use numeric keys to enter delay and **< >** to selected field. ENTER

WATER METER PULSE DELAY:

If the controller is operating in the volumetric mode and no pulses are detected for this pre-set time all irrigation will be stopped

From the **System Settings** display ENTER Use **< >** keys to advance to **Delay Time** display

Delay Time
< Press Enter >

ENTER ENTER

Water Flow Delay
03 Minutes

Use numeric keys for new time ENTER

LAST STATION ON DELAY:

This function will keep the last valve on after a program and pumps have stopped running. Allowing for ramp down and preventing pumping against closed heads

From the **System Settings** display ENTER Use **< >** keys to advance to "Delay Time" display

Delay Time
< Press Enter >

ENTER

ENTER ENTER

Last Station On
00 Minutes

Use numeric keys for new time ENTER

TWO-WIRE DEVICES

VIEW VALVES ONLINE:

This is the field DataValves™ messaging back as on-line and communicating

From the **Time and Date** display use **< >**

TWO-WIRE
< Press Enter >

ENTER

Valves Online
< Press Enter >

ENTER

VALVES ONLINE
< >

Current valves on-line will display.
Use **< >** keys to view.

ASSIGN VALVES TO STATIONS:

If the default setting is not suitable valves can be reassigned to different stations. This is a useful feature for example to hydraulically balance a system.

From the **"TWO-WIRE"** menu

ENTER >

Assign Valves
< Press Enter >

ENTER

Note: The default is valve 01 assigned to station 01 - valve 02 to stn 02, etc.
To change use **< >** keys and change station number under the valve you wish to assign to it.

V01x 02x 03x 04x ← Valves 1—48
S01 02 03 04 ← Stations 1-48

> Use keypad to assign **valves** to stations ENTER

Note: This same step can be taken to VIEW the current wiring list. Changes to the wiring list are only made after the user presses ENTER. If BACK is pressed, changes are not saved.

RUN VALVES MANUALLY:

Valves will operate electrically without starting pumps or master valves. A useful function for testing DataCoils.

From the **"TWO-WIRE"** menu ENTER Use **< >** keys to scroll to the **Run Valves** display

Run Valves
< Press Enter

ENTER

Select Valves
#00 #00 #00 #00

Use numeric keys and **< >** to next valve ENTER

Set Run Time
00 : 00 : 00

ENTER

Use numeric keys to enter time h/m/s ENTER

DATAVALVE & PUMPNODE ADDRESS NUMBER PROGRAMMING:

To program a DataValve or PumpNode number. Connect the valve or PumpNode to the **Two-Wire Devices Program Port** or **Mobile Programmer** using the supplied leads.

Caution: Ensure programming is correct before disconnecting from the program port. Once disconnected, the device cannot be reprogrammed

From the **"TWO-WIRE"** menu → ENTER → Use **< >** keys to scroll to **"Program DataCoil"**

Program DataCoil
< Press Enter

→ ENTER

Enter Valve No.
00

Use the numeric keys to enter the number and ensure DataCoil™ is connected to the program port → ENTER

Note. Repeat above for PumpNodes. 49 is the default PumpNode addressfor the SDS-50. 97 is default for the SDS-100. PumpNodes can be supplied blank upon request.

TWO-WIRE DATANODES:

The DataNodes are supplied unprogrammed from the factory. The following describes how to select the various settings and sensor types for each DataNode. Pause, Rain-Off, Program Stop and Frost use N/O contact input (switch—black wires). Water Meters and KWH Meters use counter DataNodes (blue wires). Moisture Nodes are supplied as a complete unit.

CONFIGURING DATANODE INPUT:

From the **"TWO-WIRE"** menu → ENTER → Use **< >** keys to scroll to **Assign DataNodes** display

Assign DataNodes
< Press Enter >

→ ENTER

Enter DN No.
00 (DN N0. 1—12)

Use numeric keys to enter number → ENTER

< Select Input >
Nil

Use < > scroll keys to select → **Moisture, Pause, Rain-Off, Program stop, Water Meter, KWH Meter, Frost (1), Frost (2).** → ENTER

CONFIGURING DATANODE INPUT FOR MOISTURE SENSORS:

When selecting moisture the **program number** for the sensor must also be selected

< Select Input >
Nil

Use < > scroll keys to select

< Select Input
Moisture P-#

Use numeric keys to enter which program to assign to → ENTER

Notes on DataNodes

The Pause and **Rain Off** sensors are assigned to programs in the **Inputs menu** page 43.

Water Meter when selected refer to the previous section **Water Meter configuration and program assignment** pages 29, 30.

Frost Sensor (1) will activate frost program 7, Frost Sensor (2) will activate Frost program 8, see pages 27, 28.

con't next page

Con't

Moisture sensor pre-set irrigation override setting, see page 43.

Stop Program this is linked to the **Start Program** input sensor at the controller i.e. program/s started by the Start Program input sensor are stopped by the **Stop Program** sensor. see page 42.

VIEW DATANODES:

From the **"TWO-WIRE"** menu → ENTER → Use **< >** keys to scroll to "View Data Nodes" display

View Data Nodes
< Press Enter >

→ >

ENTER →

< Add. 01	Add. 02 >
X00 (##)	X00 (##)

Use **< >** keys to view

ASSIGN NUMBER TO DATANODE / MOISTURE NODE:

To assign a number to the DataNode or Moisture Node, the DataNode must be connected to the **Two-wire Devices Program Port** or **Mobile Programmer** using the supplied leads.

Caution: Ensure programming is correct before disconnecting from the program port. Once disconnected, the device cannot be reprogrammed

From the **"TWO-WIRE"** menu → ENTER → Use **< >** keys to scroll to **Program DataNodes** display

Program DataNodes
< Press Enter >

ENTER →

Enter DN Number
00

Use the numeric keys to enter the DN number → ENTER

INPUTS:

Inputs are from switches or sensors. The controller supports analogue and digital inputs. Both direct connection to the controller terminal strip and the 12 field Data-Nodes.

PRESSURE:

This sensor will either stop irrigation high and low pressure, or skip a station after a pre-set time delay. Digital sensors can be connected to the terminals [HP], [SP] and [LP]. The **[PRE]** terminal at the controller is for an analogue 4-20 mA pressure sensor.

From the **Time and date** display scroll [>] → **INPUTS** / < Press Enter > → [ENTER] → **Pressure Sensor** / < Press Enter >

[ENTER] → **Pressure Sensor** / **Digital Inputs**

If an analogue sensor is used [ON/OFF SHORT CUT] → **Pressure Sensor** / **L### S### H###**

Use keypad to select pressure setting in kPa.
L=Low, **S**=Skip station **H**=High. [ENTER]

Note. If analogue sensor is not used - Pre-set sensors can be connected to the controller terminals [HP], [SP] and [LP]. (N/O contacts)

To program delays for sensors, refer to **SYSTEM SETTINGS** instructions page 38.

Note: The **Skip Pressure** function may not hydraulically activate a valve quickly enough, as some pumps have steep pressure curves. For example: a skip and high pressure setting may only be 100kPa apart. This differential may only take a couple of seconds the reach the high pressure cut-out point when pumping against a closed head. If this is the case, the time for the electrical signal to be initiated and a valve to electrically and hydraulically respond may be beaten by the high pressure cut-out. A pressure sustaining/relief valve can be installed that is sized to slow down the pressure increase if a valve fails to open but not completely prevent a pressure increase that would override a HP cut-out in a closed head condition.

PROGRAM START SENSOR:

This sensor will activate its selected programs for their programmed run times. The sensor input is located at the controller terminal [PRS].

From the **Time and date** display, scroll [>] → **INPUTS** / < Press Enter > → [ENTER] → **Pressure Sensor** / < Press Enter >

[>] → **Prg. Start Sensor** / < Press Enter > → [ENTER] → **Select Programs** / - - - - - - - - 8 → [ON/OFF SHORT CUT]

Use scroll < > keys to next or previous slot and repeat [ENTER] **Note.** Program 8 is as default.

PAUSE SENSOR:

This sensor will pause its selected programs when running. The programs will resume at the paused state when the sensor is de-activated.

From the **Time and date** display scroll [>] | INPUTS < Press Enter > | [ENTER] | Pressure Sensor < Press Enter >

[>] | Pause Switch < Press Enter > | [ENTER] | Select Programs 1 2 3 4 5 6 7 8 | [ON/OFF SHORT CUT]

Use scroll < > keys to next or previous slot and repeat [ENTER]

RAIN-OFF SENSOR:

The Rain-off sensor will switch the programs to a non start condition whilst the sensor is activated.

From the **Time and date** display scroll [>] | INPUTS < Press Enter > | [ENTER] | Pressure Sensor < Press Enter >

[>] | Rain-Off Sensor < Press Enter > | [ENTER] | Enter Program No? 1 2 3 4 5 6 7 8

Use scroll < > keys to next or previous slot and repeat [ENTER]

MOISTURE PRE-SET:

Moisture sensors are pre-set at the controller to override an irrigation start time if the pre-set value is reached or exceeded. The controller checks this setting before each irrigation start. A moisture sensor can only be assigned to one program or HydroSector.
(see next section re: HydroSector)

From the **Time and date** display scroll [>] | INPUTS < Press Enter > | [ENTER] | Pressure Sensor < Press Enter >

[>] | Moisture Pre-Set < Press Enter > | [ENTER] | < Mois. Sensor 1> Set Point: 75 | Use keypad to set range between 0% - 99%

[>] Set next moisture sensor and repeat as required [ENTER]

Note. The Moisture Pre-set is in Volumetric Water Content (ie a % of soil moisture). See moisture sensor guide which comes with sensors.

SET STATION FLOW:

This is where average station flow should be set. Do a test run of all stations, then take note of the live flow (l/s) through each station displayed in the INFORMATION menu.

If Flow Deviation (see below) is active, then a station will skip if it falls outside the limits. If 3 stations skip in a row, the system will shutdown.

From the **Time and date** display scroll > | INPUTS < Press Enter > | ENTER | Set Station Flow < Press Enter >

> | S01 02 03 04 / 00 00 00 00 | Key in the noted flow values. | ENTER

FLOW DEVIATION:

Once station flow has been allocated (above) a deviation percentage can be set. This is the maximum threshold the flow can deviate above and below the normal amount. The controller starts to monitor flow deviation after 3 minutes for the first station, with 45 seconds for sub-sequent stations.

From the **Time and date** display scroll > | INPUTS < Press Enter > | ENTER | Flow Deviation < Press Enter >

> | Set Deviation 20% | ENTER

LEAK DETECTION:

Once enabled, the controller monitors pulses from the water meter (wired directly into the WMD terminal). Should the controller reviece 5+ pulses whilst no programs/pumps are running, then a Leak Detection fault is logged within the controller.

From the **Time and date** display scroll > | INPUTS < Press Enter > | ENTER | Leak Detection < Press Enter >

> | Leak Detection < Disabled > | > | ENTER

LEVEL SENSOR:

Available on the SDS-100. This feature is used with the Signal Flomag Ultrasonic Level Sensor.

Instructions on how to operate included with the sensor. Possible functions are: 1) Tank Fill 2) Pause/Resume Irrigation 3) Shutdown program on low level 4) View live tank level display.

Also included is the ability to automatically adjust program run times to evenly distribute available water.

WEATHER STATION:

Program adjustments via Weather Station evapotranspiration is available by connecting a Signal WeatherHawk Weather Station to SignalCloud.

Instructions available separately with weather station purchase.

VIEW INPUTS: (inputs within the physical terminal strip)

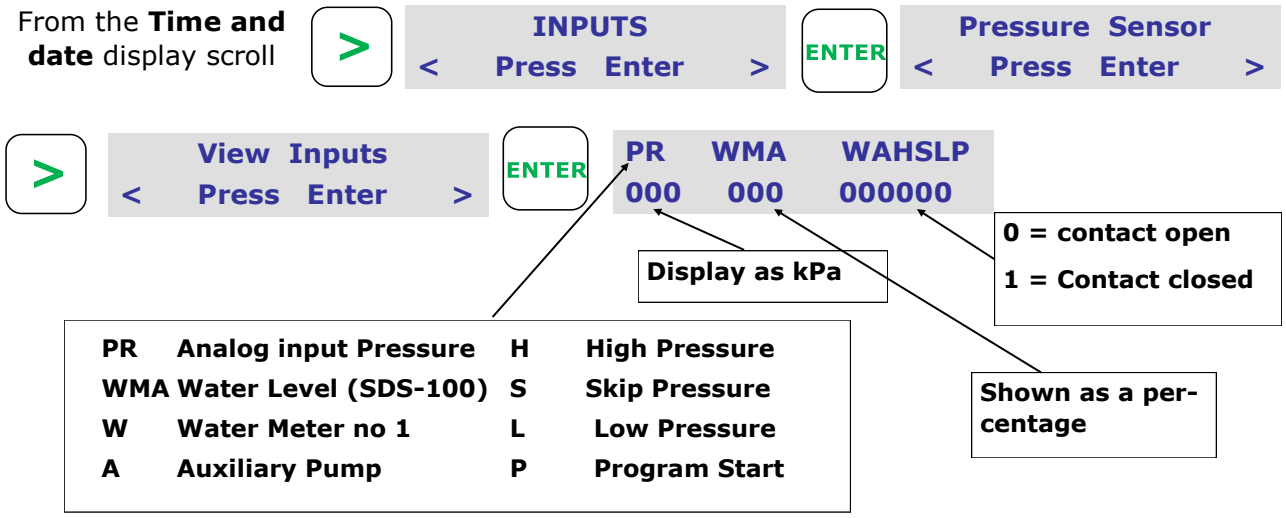

DATANODE STATUS FROM "VIEW DATANODE" DISPLAY:

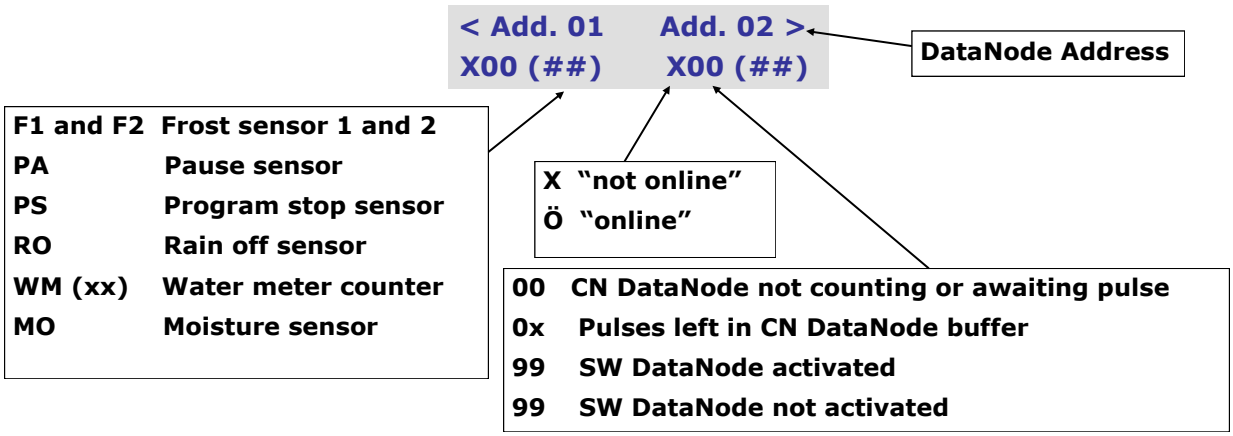

HydroSector™ PROGRAMMING:

HydroSector™ INTRODUCTION:

- The HydroSector program is a conversion of the standard irrigation programs into a linked sequence of matched-precipitation HydroZones. Each Zone would typically be a number of matched precipitation stations. For example, program 1 would become matched precipitation zone 1, program 2 would become matched precipitation zone 2, etc.
- The HydroSector can be programmed using time, precipitation (mm), or volume (litres).
- If the auto-programming option is used, the total of hours/minutes, mm, or litres are programmed for each HydroSector. The program calculates the run-time or volume for each valve (in the case of volume) within that HydroSector.
- The program structure consists of 4 programmable master start times. Each HydroSector can be programmed to accept or reject these starts.
- Each HydroSector is programmed with a 14 day calendar.

HydroSector™ FLOW CHART:

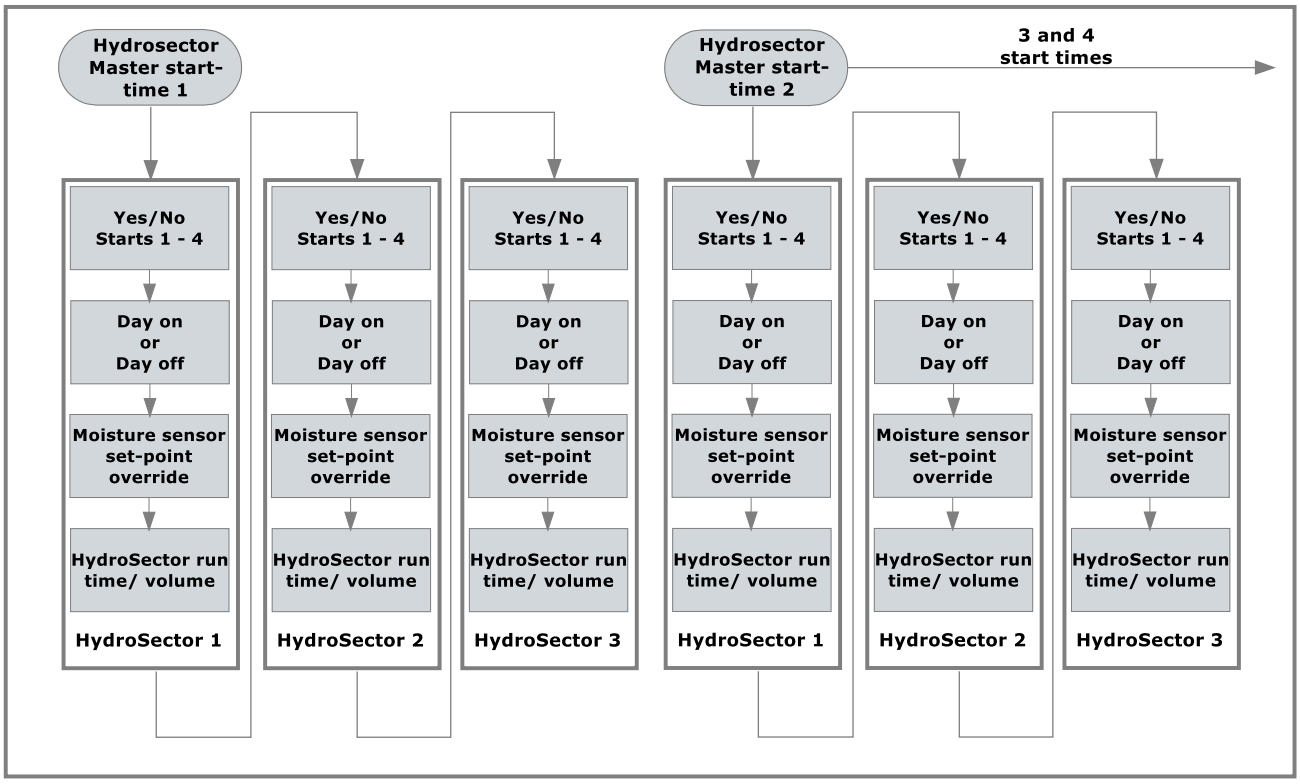

HydroSectors will run in sequence. If an override is triggered e.g. Moisture, day off, non acceptance of a master start time 1—4, the next H/sector in the sequence will start.

HydroSector™ STEPS:

1. Check the current station/valve wiring within the [**TWO-WIRE**] then [**>**] [**Assign Valves**] menu. When using HydroSectors, stations should be wired sequentially. For example, a typical system may be set up as follows: HydroSector 1 using stations 1—10, HydroSector 2 using stations 11—20 and so on.
2. Enter the precipitation rate for each HydroSector™. This is done within [**SYSTEM SETTINGS**]. Up to 8 precipitation rates can be set (for each HydroSector).
3. Scroll to [**PROGRAMS**] then [**>**] before selecting [**HydroSector Prg**], then press **Enter**.
4. Set the number of matches precipitation zones required with the **ON/OFF** button. This will convert standard programs into HydroSectors. For example, if there are 3 zones with matched precipitation, assign programs 1, 2 and 3 as HydroSectors (*see below)*.
5. Select master start-times for HydroSectors—up to 4 start-times can be selected.
6. Enable auto-programming *(see next page).*
7. Within auto-programming, assign stations to each HydroSector. For example, HydroSector 1: Stations 1—5. Then [**>**] … HydroSector 2: Stations 6—9.
8. Select the required mm per HydroSector. Press **ON/OFF** to switch between viewing time and mm. Press [**>**] to select next HydroSector. Finally press **ENTER.**
9. Initial HydroSector setup is now complete. To accept master start times and watering days, scroll to [**PROGRAM**] [**>**] [**Enter Program**]

CONVERTING PROGRAMS TO HydroSectors™: (inc. setting Master Start Times)

From the **Program Entry** display scroll [>] → `HydroSector Prg` / `< Press Enter >` → [ENTER] → `Assign Programs` / `- - - - - - - -`

This converts a standard program to a HydroSector [ON/OFF SHORT CUT] [>] [ENTER] → `< Set Start time 1 >` / `None`

These are the 4 master start times of the H/Sector Program [ON/OFF SHORT CUT] → `< Set Start time 1 >` / `00 : 00 : 00 Am` — Enter start time from keypad hr : min : sec

[AM PM COPY] [>] Repeat procedure for more start times [ENTER] → `Auto programming` / `< Disabled >`

AUTO-PROGRAMMING FEATURE:

The auto-programming option assigns time or volume of water to each valve & stn within the HydroSector from a total value entered for each H/Sector.

If Auto programming is not selected go to **Program Entry** display and program as normal.

To enable Auto-program [>] [ENTER] **Auto programming < Enabled >** [ENTER] **< Hydro Stations > H# From ## To ##**

Enter station numbers from keypad [ENTER] **< Total Water > H# 00 : 00 : 00 100%** Use numeric keys and enter time

To program by precipitation [ON/OFF SHORT CUT] **< Total Water > H# ## mm 100%** Use numeric keys and enter mm. Run time can be checked by pressing on/off

Rewriting Progs .....Please wait

For the volumetric watering option this must be selected in the **Program Entry** menu

The HydroSectors are now selected. Stations have been allocated and watering times and/or volumes have automatically been calculated for each valve/station and start times have been programmed.

The next phase enters into each HydroSector its start time acceptances of the 4 master start times and the 14 day calendar for each of the sectors. Pressing the **Back** key to **Program** display and continue as described in the next section.

ACTIVE DAYS AND ACCEPTANCE OF MASTER START TIMES:

Program < Press Enter > [ENTER] **Program Entry < Press Enter >** [ENTER]

Enter Program No? # Use numeric keys to select [ENTER] **< H# Mode > Normal**

If no loop prog required [ENTER] **H# Master Pump Default** [ENTER] **H# Water Days SMTWTFS SMTWTFS** [>]

[ON/OFF SHORT CUT] [ENTER] **< H# Start Time 1 > None** On/off key to select starts [ON/OFF SHORT CUT] Use **< >** keys to select more starts [ENTER]

< P# Option > Time [ENTER] The display will show the time or volumes allocated to each station. Water volume will be calculated depending on number of valves allocated to that station

Use **< >** keys to view stations

ENTER

H# Station Delay
00 : 00 Ms

If required use numeric keys to enter station delay mins : secs.

ENTER

H# Total Water
00 : 00 : 00

ENTER

If the **auxiliary pump** option is used the following will display.

H# Prewet Delay
00 : 00 Ms

Use keypad to enter delay time min : sec

ENTER

H# Aux. Pump
default

To select DataNode other than default (50 or 98)

AM PM / COPY

Use keypad to select

>

<H# Aux. Stn 01>
00 : 00 :00 100%

Use keypad to enter auxiliary stations run times hr:min:sec

>

Repeat for next stations

ENTER

Note. The auxiliary pre-wet is the time the station runs without the dosing pump (auxiliary) running. The auxiliary run is the dosing pump run time. The balance of the time on the stations watering time is a post-wash time.

CONTROLLER FACTORY DEFAULT RESET:

This resets controller to all factory default settings and clears all programmed entries.

From the current **Time and Date** display **< >** scroll

SYSTEM SETTINGS
< Press Enter >

ENTER

Flow Meter pulse
< Press Enter >

>

Factory Default
< Press Enter >

ENTER

Default < 1234 >
WM Config <6021>

Key in **1234**

FAULT FINDING THE CONTROLLER:

SDS Series controllers have been designed for simplified service and repair. The controller does not require a service technician for on-site electronic repair - instead utilising plug-in replacement PCB modules.

The principle components of the controller consist of:

1. A mother board which contains the internal PCB power supply, lightning protection and plug-in module interfaces.
2. A plug-in logic board which houses the microcontroller, timing clock and system memory
3. A plug-in output board which drives the two-wire network.
4. A plug-in keypad assembly which incorporates the display.

Page 51 of this manual indicates the various key components and also the LED indictors and their normal status. These are used to initially pinpoint the fault condition if they display abnormal.

ROUTINE THINGS TO CHECK FIRST:

1. Is the power switched on at the controller.
2. Test the power supply to the controller with a DC volt meter. It should read 36VDC
3. Check that the terminal strip is not loose
4. Check that the terminal screws are firm but not over tight
5. Check that the wires have not pulled away from the terminal strip by lightly pulling on them
6. Check the current draw at the controller **INFORMATION** menu. Normal current draw for each DataCoil model is as follows:

   SD2NC: Idle = 1.5 mA | Running = 16 mA

   SD3NO: Idle = 1.5 mA | Running = 21 mA

   SD3LT: Idle = 1.5 mA | Running = 1.5 Ma

If these steps are unsuccessful, try resetting the controller to factory default settings.

Try re-setting the controller to factory default setting, then reprogram..

REPLACING THE PLUG-IN MODULES:

Refer to next page for correct PCB LED indictors.

Before any module is replaced, turn the power off to the controller. Always hold the modules at the edge of the PCB boards. Modules are designed to easily plug in so no force is required. Make sure the connectors are aligned and no problems will be encountered. It is often easier when replacing the logic board to unplug the key board display panel to provide easier access.

Do not over tighten the four retaining screws at each corner when securing the key pad back in place, just lightly nip the screws up to the panel.

The motherboard has **7 screws** locating it to the base of its enclosure, make sure all are removed when replacing the board and it will lift away easily.

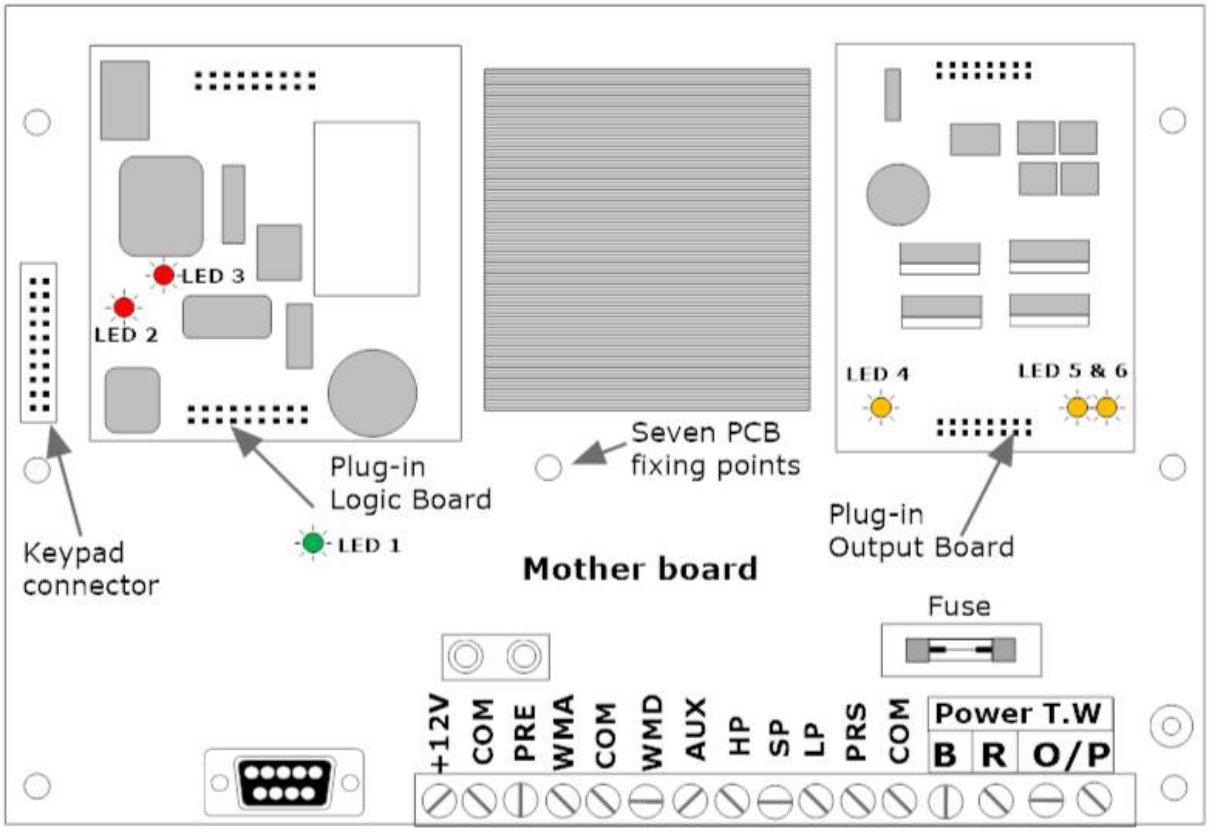

If it is suspected a fault is present at the controller and not in the field cabling or DataValves, proceed as follows:

1. Remove the four front keypad panel screws and carefully lift to one side, press any key on the keypad to ensure the output is switched on. Observe the six LEDs for correct operation.

LED 1 should be on. If it is not, test for DC voltage at **B R** terminals. If this is OK, replace the mother board.

Note: LED 1 indicates normal operation of the PCB motherboard power module.

2. If **LED 1** is on, proceed to **LED 2 and 3**.

LED 2 should be on, **LED 3** should flash. If not correct on both LEDs, replace the plug-in logic module.

Note: LED 2 indicates power to the Logic module **LED 3** indicates the microprocessor timers are working.

3. If **LED 1, 2** and **3** are all correct proceed to **LEDs 4 , 5** and **6**.

This test assumes all other LEDs are normal.

LED 4 should be on. Press any key at the keypad and **LED 5** and **6** should activate. If this is not correct, replace the plug-in output module.

Note: LED 4 indicates power to the output board, **LED 5** and **6** indicate power out from the output module.

CURRENT DRAW:

DataCoils draw current as follows:

SD2NC: Idle = 1.5 mA | Running = 16 mA

SD3NO: Idle = 1.5 mA | Running = 21 mA

SD3LT: Idle = 1.5 mA | Running = 1.5 mA

If a total current draw exceeds 1500mA, the controller will indicate a short circuit condition. If the total current load exceeds 900mA, the green two-wire LED will flash. This condition will be either partial short circuit or could indicate the short is at a distant point in the cable from the controller.

See illustration on next page (53).

FAULT FINDING FIELD VALVES AND CABLE:

The patented two-way communication between the valves and the controller makes it possible to instantly observe the performance of the field valves. By doing this, faulty DataCoils™ and cable problems are quickly identified.

In the controller **TWO-WIRE** menu, the **Valves Online** function can be accessed. This will display all valves within the system and display if they are online or offline.

The communication protocol is biased towards the forward channel i.e. switching the valves. The back channel is split into two separate areas - reporting status of the valves (1) and the DataNode sensor functions (2).

The status reporting of valves online or offline can be relied upon if the two-wire cable is installed correctly and has good wire connections. with no leakage to earth caused by a breakdown in the wire insulation or substandard installation.

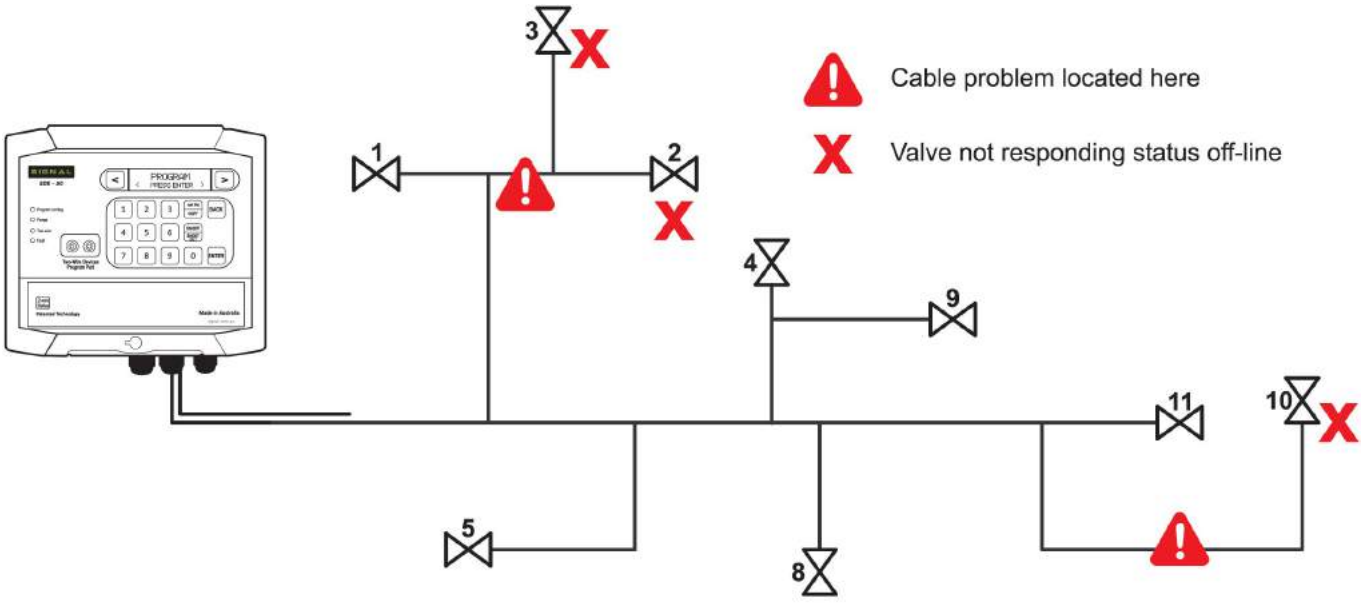
Cable problem located here
Valve not responding status off-line
3
1
2
4
9
11
10
5
8

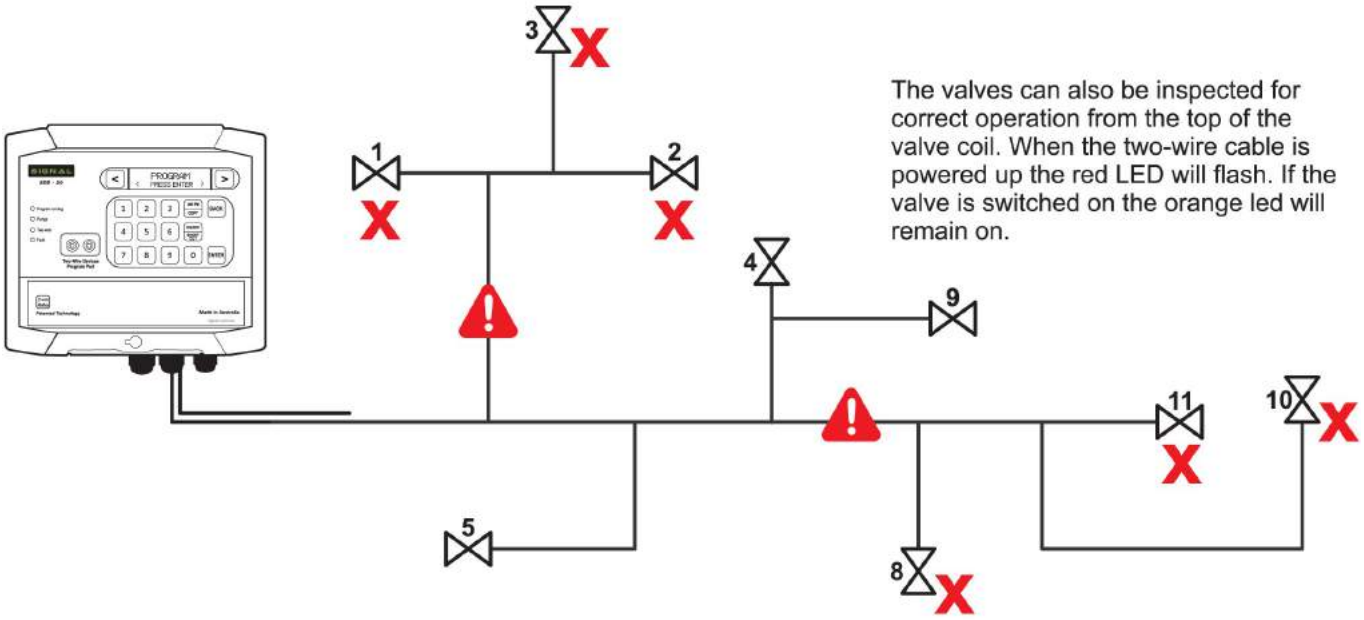
The valves can also be inspected for correct operation from the top of the valve coil. When the two-wire cable is powered up the red LED will flash. If the valve is switched on the orange led will remain on.
3
1
2
4
9
11
10
5
8

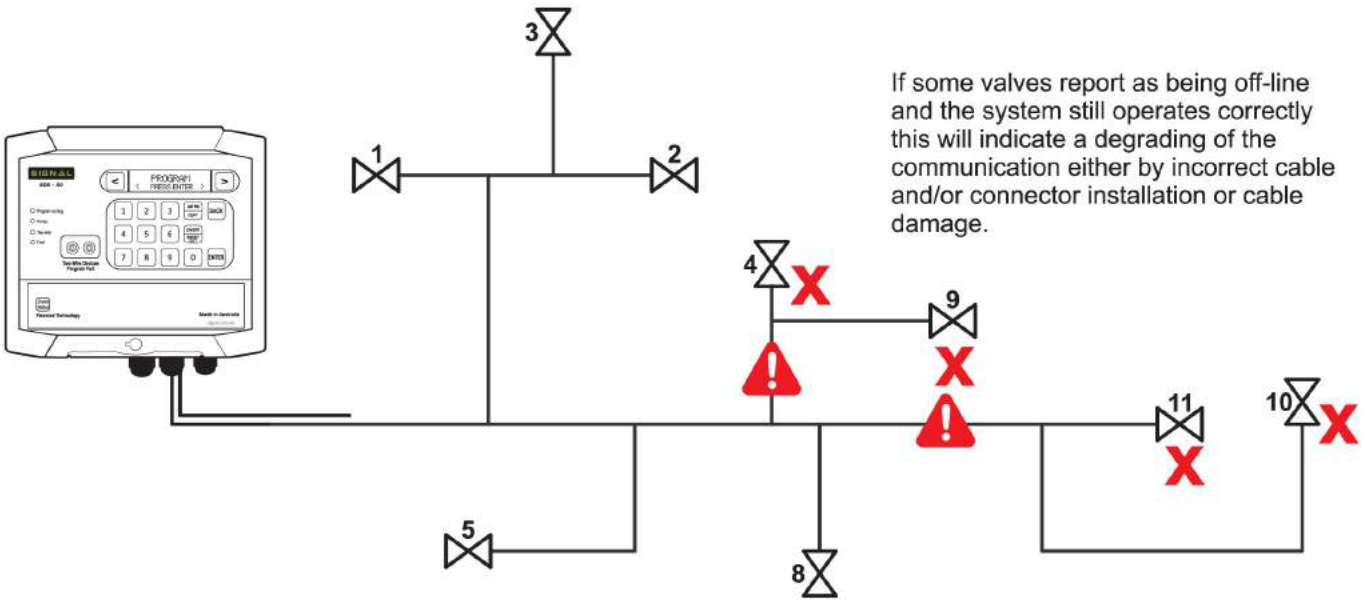
If some valves report as being off-line and the system still operates correctly this will indicate a degrading of the communication either by incorrect cable and/or connector installation or cable damage.
3
1
2
4
9
11
10
5
8

SHORT CIRCUIT FAULT FINDING OF TWO-WIRE DEVICES:

This fault finding operation requires a clamp-on milliamp meter with a range down to 20 milliamps and a SIGNAL two-wire fault finding tool (SD-RB). If this is not available, in an emergency, a suitable 5-10 watt 250 Ohm wire wound resister can be connected in series with the two-wire cable. Use caution and due care, as a resistor can reach temperatures that will cause skin burn and melt plastics when in contact.

A malfunction of the system is evident when the red LED indicator is on. Press the ENTER key to display the fault. In this instance we are describing the detection of a short circuit fault.

1. The DataCoil models SD2NC, SD3NO & SD3LT have, as a precaution, an internal device that will short-circuit if excessive voltage is present. This reduces a "daisy chain" effect of electrical surge damage to multiple DataCoils and other two-wire devices in the event of a lightning strike.
2. When a short-circuit is present the electrical current load on the two-wire cable must be reduced to a level where the circuit breakers do not reset, thus enabling electrical current testing of the system.

The electrically short circuited device must be located and replaced or if a cable short, repaired and tested. If a TW device is not immediately available, disconnect the shorted device from the two-wire cable until it can be replaced.

TRACING THE SOURCE OF AN ELECTRICAL SHORT CIRCUIT:

Connect the two-wire cable to the SIGNAL two-wire fault finding tool (SD-RB) to reduce the current within the cable network. At the controller, access the **TWO-WIRE** menu, then navigate to **Run Valves** and activate a valve to run for a suitable period of time. This will power-up the cable network for fault detection.

A suitable low current reading clamp meter is used to trace the source of the short circuit. To detect the high electrical current source, clamp the meter over **one wire only**, at a convenient location normally at the valves where the inner insulated wires can be accessed. Any "T" branches of the cable network should also be tested to follow the high current and hence the short-circuit.

When tracing a short circuit, the clamp meter will indicate a higher current flow before the short circuit. If the meter displays no or low current flow, you have bypassed the short. Once zeroed into the suspected short-circuit location, clamp the meter on one of the wires between the device and the two-wire cable to confirm this is the faulty device. In some instances, the short-circuit could be in the two-wire cable. A cable fault is usually isolated to an area between two valves.

Refer to the examples on the following pages:

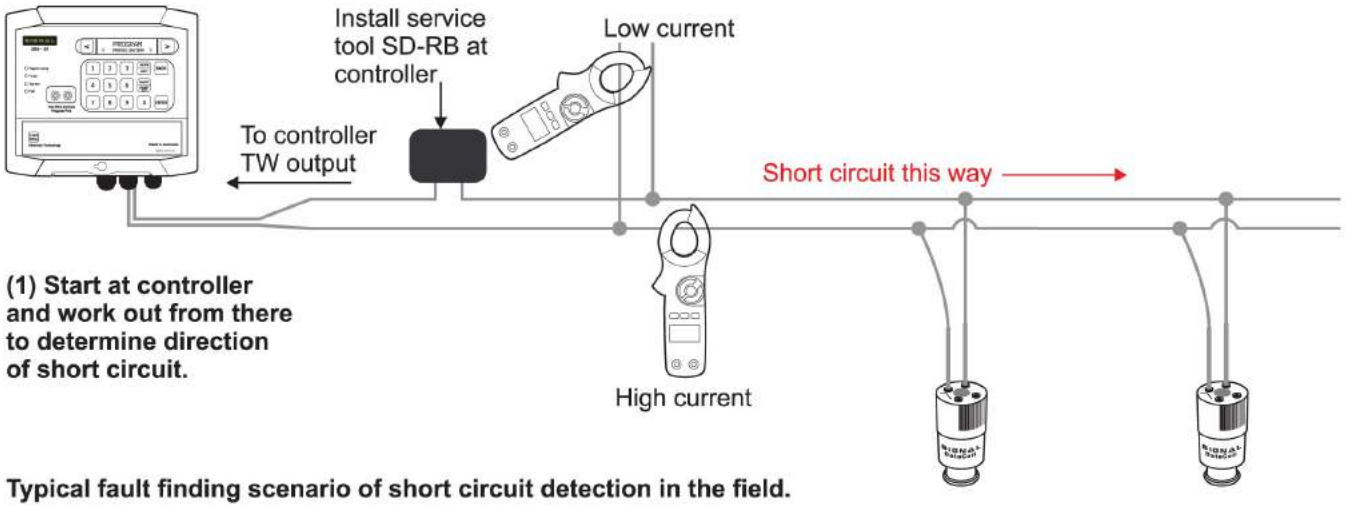

Typical fault finding scenario of short circuit detection in the field.

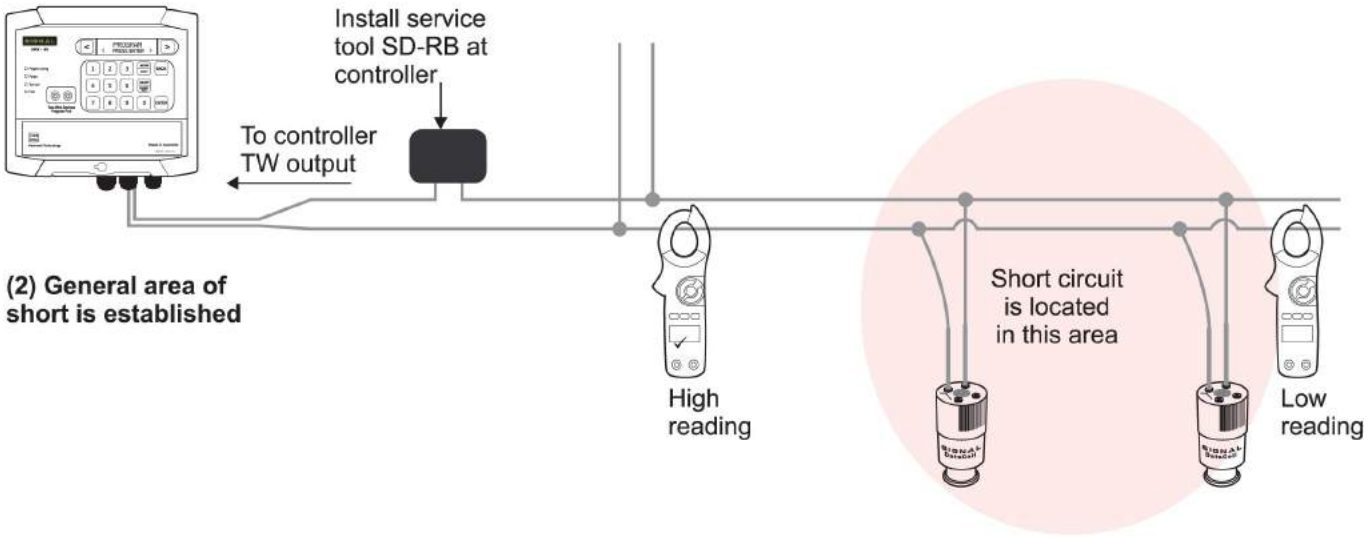

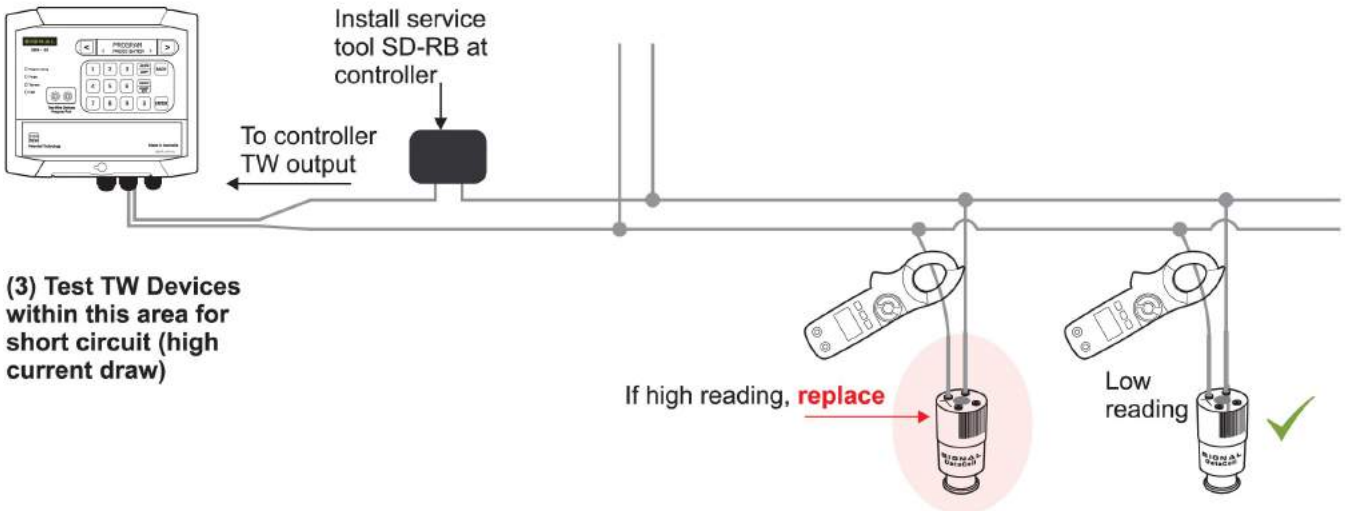

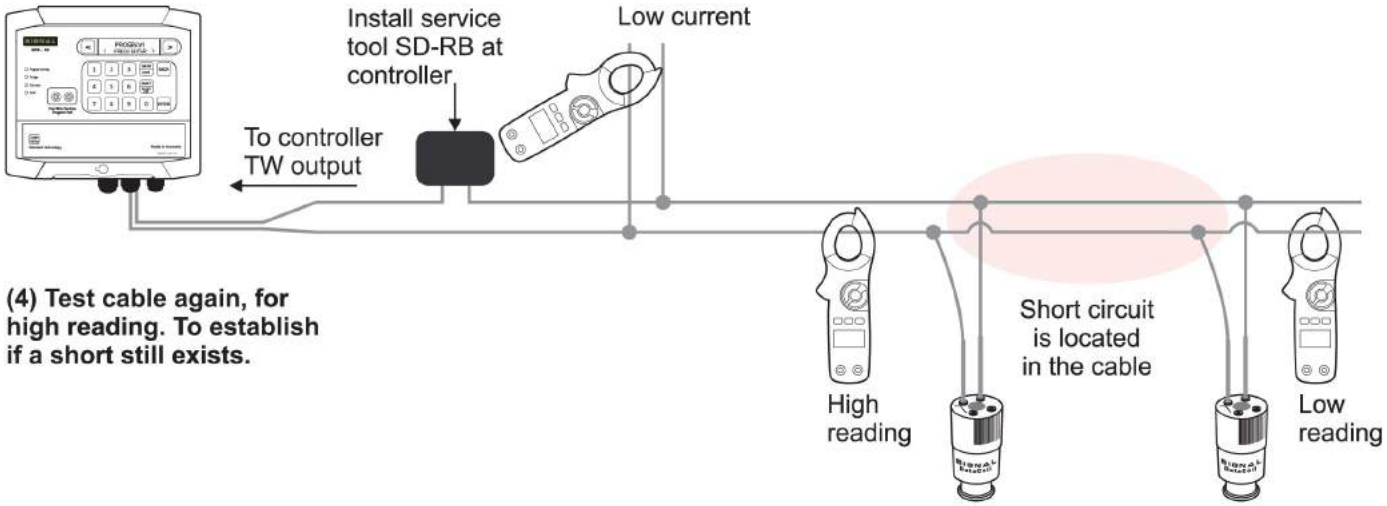

(4) Test cable again, for high reading. To establish if a short still exists.

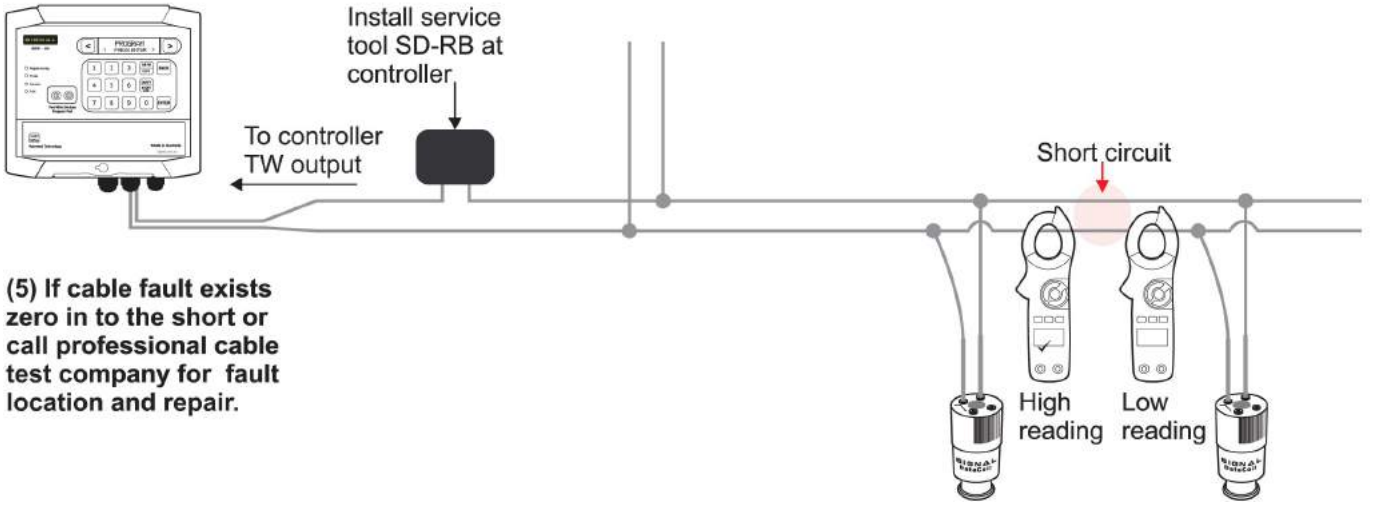

(5) If cable fault exists zero in to the short or call professional cable test company for fault location and repair.

ADDITIONAL FAULT FINDING:

On initial installation, great care should taken to avoid grit contamination entering the Data-Coil plungers. Ensure the system is properly flushed before start-up to avoid dirt/grit contamination of the piping.

If a coil malfunctions, but is still reporting as online with the correct LED indication, it is almost certain that the coil plunger is jammed by grit. Remove from the valve, clean the plunger and internal coil chamber and reinstall.

It should be noted that fine grit can be difficult to see and often is only detected by feel.

Do not stretch the plunger spring as the coil's electrical efficiency will be reduced.

Controller Red LED is on	Water meter stopped counting	Check water meter output and connections
Controller Red LED is on	Pressure fault, high, skip or low	Rectify hydraulic problem
Controller Red LED is on	Electrical short circuit in two-wire	Trace short circuit
Green LED flashes	System electrical current draw is exceeded beyond 900mA	Check for partial short circuit and all two-wire devices for fault.
No display	Faulty power supply Faulty controller module	Test power supply input, should be 36VDC Observe all PCB module LEDS for correct indication
The controller is erratic in operation or appears to have an intermittent fault.	Loose electrical connections Electrical leakage to earth Power disruptions Electrical, EMI interference Faulty power supply Faulty controller module	Make sure all electrical connections are correctly terminated. Inspect cable connectors Check the controller log for electrical outages. Are there any high voltage electrical switchgear close by? If variable speed pump drives are used they must be installed strictly to the manufactures guidelines. Test the controller power supply. Observe all PCB module LEDs for correct indication

Con't

A valve will not activate	Faulty field wire connector or cable damage	View **Valves On-line** at controller to determine position of cable fault.
	Valve not assigned	Check **Assign Valve** at controller
	Faulty DataValve	Inspect valve LED indictors for correct operation.
A valve stays on	Dirt contamination in DataCoil	Unscrew from valve and clean. Take care with "O" ring and spring. Do not cross thread or over tighten on valve. Do not stretch the spring.
	Faulty DataCoil	Inspect valve LED indicators for correct operation

The model SDS-50 controller has a **maximum capacity** to operate 4 valves at one time with an additional master valve or pump. The chart below is based on model SD2NC DataCoil™

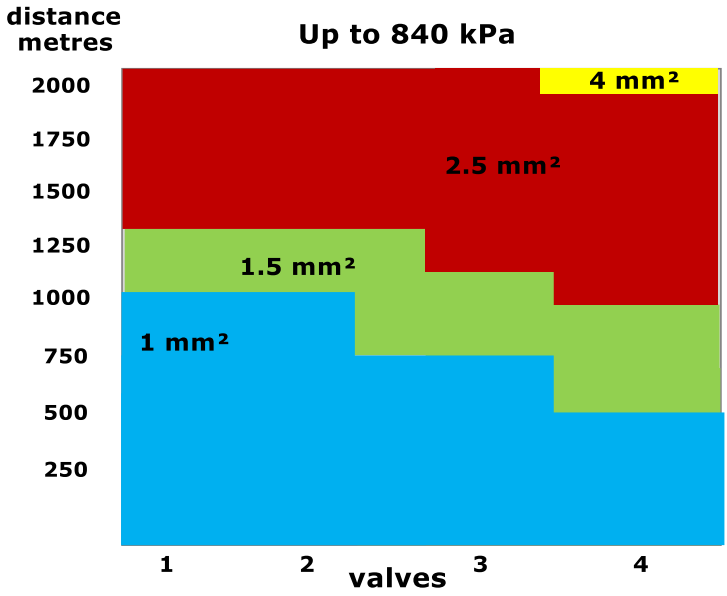

Guide to distance/cable size when reliable back-channel operation is important

The chart shows the varying degree of performance in relationship to number of valves running, cable size, distance and operating pressure. The tests were performed using actual cable lengths and in workshop test conditions. High resistance and intermittent connections can effect the performance of the back-channel and valve actuation.

For optimum performance try and ensure that groups of valves operating at the end of the two-wire cable are split so some operate closer to the controller.

4G MODEM:

- The controller supports connection of a 3G/4G modem to enable remote monitoring and control
- Once connected, remote access is available from PC/MAC, Tablet and Smartphone (iOS/Android)
- Modems require active Telstra Data SIMs. Cards require 50mb/month.
- Ensure that a SIM card with deactivated PIN number
- Modems sourced through SIGNAL distributors are pre-calibrated to work with Telstra's cellular network. In the event that another network is requested, a special order can be made. Modems purchased outside of Australia will typically be calibrated to suit the country's largest network.

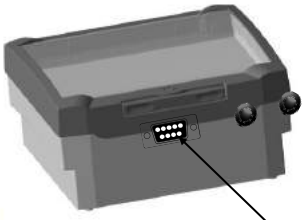

Signal 'Purple2' Modem

Connect the modem to the serial port at the base of the controller.

Connect the BLACK antenna wire to the external antenna.

SDS Series controllers will only connect to SignalCloud using modems purchased through authorised Signal distributors..

WI-FI MODULE:

Confirm that there is Wi-Fi coverage in the area. Confirm that the Wi-Fi is active by switching cell data off on your mobile phone, and connecting to desired network. Once connected, test your internet connection by visiting a popular website.
Please note that Wi-Fi chips found in modern phones are significantly stronger than those found in industrial wireless chips. More than 10m distance from a Wi-Fi router/repeater can be problematic.

Next, plug your Wi-Fi Module into the RS-232 port underneath your controller. Once you do so, the little green LED should begin to flash rapidly.

To connect your SDS Series controller online with the Wi-Fi module, the following fields need to be completed: Set **WiFi SSID**, **WiFi Passkey**, **Device ID** and **Device Password**.

To access these, scroll through the controller menu until you reach the [COMMUNICATIONS] tab and press 'Enter'. You will then be able to scroll through the Communications menu and press 'Enter' to drop down into these sub menus. The following information needs to be entered into each field:

Set WiFi SSID: Enter the publicly visible name of your Wi-Fi net work

WiFi Passkey: The password to your Wi-Fi network.

Device ID: This is the 16 digit Device ID provided to you by SIGNAL. Device ID's are case-sensitive. SDS owners can currently select their own – simply choose a descriptive site code.

Device Password: User set password - Must be 6 letters or digits. '123456' is the recommended default set by SIG NAL.

This password can be changed regularly to prevent non-authorised users, or previous contractors, from accessing the controller remotely.

Note: that only the following types of encryption are supported:

Value	Authentication Mode
0	Open (Default)
1	WEP-128
2	WPA1
3	Mixed WPA1 & WPA2-PSK
4	WPA2-PSK
5	Not Used
6	Adhoc, Join any Adhoc network

ENTERING INFORMATION VIA KEYPAD:

The first step is understanding how to enter information into the controller. Due to the numerical design of our keypad, we have developed the following system for those parts of the controller which require textual input:

Pressing '1' will bring up a lower-case "a" on the screen.
Pressing '2' will bring up an upper-case "A" on the screen.
Pressing '3' will bring up the number "1" on the screen.
Pressing '4' will bring up a blank space " " on the screen. (scrolling will reveal additional characters/symbols).

Pressing (>) and (<) allows you to scroll through to other letters (if you pressed '1' or '2'), digits (if you pressed '3') and symbols (if you pressed '4').

Pressing 'ON-OFF' confirms a letter or digit, allowing you to continue with the next.
Pressing 'Enter' once a word has been finished locks it in, bringing you back to the previous menu. Make sure you press 'ON-OFF' on your final letter before pressing 'Enter'.
Please Note If you have a 'space' in your SSID or Passkey, you must use the "$" symbol instead of the " " symbol (by pressing '4').

For example, if you need to enter the word "disable" into a text field, you would start by pressing '1', then scrolling to the right with (>) until you reach the letter "d". Once you reach this letter, you would press the 'ON-OFF' button to confirm. You would then press the '1' button again, scrolling with (>) once again until you reach the letter "i", then pressing 'ON-OFF' to confirm.
You continue this process until you reach the "e" on "disable". After pressing 'ON-OFF' to lock in the final letter, press the 'Enter' button to finalise your selection.

If you need to remove some letters from the screen, press '4' to create a blank space, then press 'ON-OFF'. Repeat this by pressing '4' then 'ON-OFF' over where the 'e' was. Finally, press the 'Enter' key to confirm your selection.

Site Notes **SDS Series**

S/N	Site:	Address no:	GSM/3G:

Stn	Valve/s	Stn	Valve/s
1		25	
2		26	
3		27	
4		28	
5		29	
6		30	
7		31	
8		32	
9		33	
10		34	
11		35	
12		36	
13		37	
14		38	
15		39	
16		40	
17		41	
18		42	
19		43	
20		44	
21		45	
22		46	
23		47	
24		48	

DataNodes

1	
2	
3	
4	
5	
6	
7	
8	
9	
10	
11	
12	

Program	Mast pump	Aux pump	No pump
1			
2			
3			
4			
5			
6			
7			
8			

Default pump settings

1-8	49		
1-8		50	

NOTES.

HydroSector Program

program	As HydroSector	Precipitation rate	Moisture pre-set	Tick days on S	M	T	W	T	F	S	S	M	T	W	T	F	S	Tick starts selected 1	2	3	4
1																					
2																					
3																					
4																					
5																					
6																					
7																					
8																					

	Total run time	Total litres	Precipitation: mm
1			
2			
3			
4			
5			
6			
7			
8			

HydroSector Master Start times

1.	2.	3.	4.

Australia and International Distributed by:

Technical Irrigation Imports
16 Mumford Place,
Balcatta 6021
Western Australia
Tel. 61 8 92402322 Fax. 61 8 92402322
Email. sales@signal.com.au
www.signal.com.au

New Zealand Distributed by:

Willowbank Electronics Ltd
1419 Korokipo Road
RD3 Napier
New Zealand
Ph/Fax. 64 6 8441079
Email. info@willowbankelectronics.co.nz

Signal Data Systems

Manufactured in Australia

www.signal.com.au